DESIGN, SUPPLY AND BUILD CONTRACT
(NO.: TPP335/0202/CMEC/NG)

FOR

ESTABLISHMENT OF ONE 335 MEGAWATT
SINGLE CYCLE GAS TURBINE POWER PLANT
AT ~~OKITIPUP~~A, ONDO STATE, NIGERIA
Omotosho

BETWEEN

NATIONAL ELECTRIC POWER AUTHORITY OF
FEDERAL MINISTRY OF POWER AND STEEL,
FEDERAL REPUBLIC OF NIGERIA

AND

CHINA NATIONAL MACHINERY AND EQUIPMENT
IMPORT AND EXPORT CORPORATION,
PEOPLE'S REPUBLIC OF CHINA

Beijing, 2002/03/27

CONTENT OF CONTRACT

SERIAL	PARTICULARS	PAGE
Article 1	Definitions And Interpretation	1-4
Article 2	Scope Of The Contractor's Supply	1-6
Article 3	Contract Price And Terms Of Payment	1-6
Article 4	General Responsibilities Of The Employer	1-8
Article 5	Payment Of Income Tax, Etc.	1-9
Article 6	Import Duties, Transit Duties, Customs Duties, PermitsAnd Clearance	1-9
Article 7	Spare Parts	1-9
Article 8	Technical Documentation	1-10
Article 9	Training Of Employer's Personnel	1-10
Article 10	Design Liaison	1-11
Article 11	Progress Meetings	1-12
Article 12	Packing, Transportation And Marking	1-12
Article 13	Shipping Documentation	1-13
Article 14	Unloading And Storage At Site	1-14
Article 15	Contractor's Superintendence And Inspection	1-14
Article 16	Accommodation And Office For Contractor.	1-14
Article 17	Electricity, Water And Fuel Supply	1-15
Article 18	Warranty, Guarantees For Materials, Workmanship And Performance	1-15
Article 19	Inspection, Test-Run, Performance Guarantees And Taking Over	1-16
Article 20	Liquidated Damages	1-19
Article 21	Extension Of Time For Completion	1-20
Article 22	Termination	1-20
Article 23	Changes	1-21
Article 24	Language	1-22
Article 25	Compliance With Laws	1-22
Article 26	Confidentiality And Nondisclosure	1-22
Article 27	Patent Right	1-22
Article 28	Assignment And Subletting	1-22
Article 29	Employership Of Power Plant	1-23
Article 30	Liabilities, Indemnities For Accidents And Damages	1-23
Article 31	Force Majeure	1-24
Article 32	Settlement Of Disputes – Arbitration	1-24
Article 33	Limitations Of Contractor's Liability	1-25
Article 34	Notices	1-25
Article 35	Effectiveness Of The Contract	1-25
Article 36	Future Expansion	1-26

LIST OF APPENDIXES

SERIAL	PARTICULARS	PAGE
Appendix 1	Design Basis Of Single Cycle Gas Turbine Power Plant	2-2
Appendix 2	Brief Description On Single Cycle Gas Turbine Power Plant	2-4
Appendix 3	Drawings For Single Cycle Gas Turbine Power Plant	2-54
Appendix 4	Main Equipment List	2-66
Appendix 5	Main Technical And Economical Targets	2-83
Appendix 6	Schedule Of Construction For Single Cycle Gas Turbine Power Plant	2-84
Appendix 7	Payment Schedule For Single Cycle Gas Turbine Power Plant Under Seller's Credit Payment Terms	2-86

[redacted]

CONTRACT

No.: TPP335/0202/CMEC/NG

This Contract, made and entered into as of this 27th day of March, 2002 in Beijing, China

BETWEEN

NATIONAL ELECTRIC POWER AUTHORITY OF FEDERAL MINISTRY OF POWER AND STEEL OF FEDERAL REPUBLIC OF NIGERIA having his permanent office at Corporate Headquarters, Plot 441, Zamberi Crescent, Maitama, Abuja, Federal Republic of Nigeria (hereinafter referred to as 'the Employer') of the ONE PART

AND

CHINA NATIONAL MACHINERY AND EQUIPMENT IMPORT AND EXPORT CORPORATION having his registered office at 178, Guang An Men Wai Street, Beijing, People's Republic of China (hereinafter referred to as 'the Contractor') of the OTHER PART

WHEREAS, the Employer intends to establish for account and whole possession of the government of Federal Republic of Nigeria, a new three hundred and thirty-five (335) megawatt single cycle gas turbine power plant using natural gas as fuel with provisions to convert to a combined cycle plant in future at Okitipupa, Ondo State, Federal Republic of Nigeria named and known as Okitipupa Thermal Power Plant - Plant A (hereinafter referred to as **'Power Plant'**) and has obtained necessary permissions from the Government of Nigeria for implementation of this project;

And WHEREAS, the Employer has requested the Contractor to design, supply, build the Power Plant on turnkey basis and to train the Employer's operating personnel;

And WHEREAS, the Contractor possesses the technical knowledge, skill and experience of construction of power plants of different capacity and types and is willing to execute the design, supply, erection, commission and civil engineering construction of the Employer's Power Plant on turnkey basis, to acquire credit facility for the Employer for the Power Plant project from The Export Import Bank of China (hereinafter referred to as 'China Eximbank') and to provide training to the Employer's operating personnel;

And WHEREAS, the Contractor, for and in consideration of the payment and repayment guarantees to be made to the Contractor as hereinafter provided, agrees to furnish labour, equipment and materials necessary or required for the work described in and in conformity with the terms and conditions herein set forth.

Now, therefore the parties hereto agree to the terms and conditions hereinafter appearing:

ARTICLE 1 DEFINITIONS AND INTERPRETATIONS

1.1 DEFINITIONS

In the Contract, the following words and expressions shall have the meanings hereby assigned to them except where the context otherwise required:

1.1.1 APPROVED means approved in writing including subsequent written confirmation of previous oral approval by the Employer and "APPROVAL" means approval in writing including such written confirmations.

1.1.2 CONTRACT means the contract signed between the Employer and the Contractor for the execution of design, supply, erection, commission of one (1) new three hundred and thirty-five (335) megawatt of ISO Conditions single cycle gas turbine power plant with provisions to convert to a combined cycle plant in future, its civil engineering construction project and its appendixes set out in the Contract as forming part thereof.

1.1.3 CONTRACT PRICE means the total sum named under the articles related in the Contract and referred to the Article 3 of this Contract .

1.1.4 EMPLOYER means NATIONAL ELECTRIC POWER AUTHORITY OF FEDERAL MINISTRY OF POWER AND STEEL, NIGERIA and the legal successors in title to such person, but not (except with consent of the Contractor) any assignee of such person.

1.1.5 CONTRACTOR means CHINA NATIONAL MACHINERY AND EQUIPMENT IMPORT AND EXPORT CORPORATION, CHINA and the legal successors in title to such person, but not (except with consent of the Employer) any assignee of such person.

1.1.6 EMPLOYER'S REPRESENTATIVE means the person appointed by the Employer to act as Employer's Representative for the purposes of the Contract and other person appointed from time to time by the Employer and notified as such to the Contract.

1.1.7 CONTRACTOR'S REPRESENTATIVE means the person appointed by the Contractor pursuant to the provisions of Article 15 hereof.

1.1.8 SUB-CONTRACTOR means any person named in the Contract as a subcontractor, manufacturer or supplier for a part of the Works or any person to whom a part of the Works has been subcontracted and the legal successors in title to such person, but not any assignee of any such person.

1.1.9 CONTRACTOR'S EQUIPMENT means all machinery, apparatus and other things (other than Temporary Works) required for the execution and completion of the Works and the remedying of any defects, but does not include Plant, Materials, or the things intended to form or forming part of the Permanent Works.

1.1.9 (a) EXPERT means the President of the Nigerian Society of Engineers or his appointed representative.

1.1.10 PLANT means machinery and apparatus intended to form or forming part of the Permanent Works, including the supply-only items which are to be supplied by the Contractor as specified in the Contract

1.1.11 WORKS means the Permanent Works and the Temporary Works or either of them as appropriate

1.1.12 TEMPORARY WORKS means the temporary works of every kind (other than Contractor's Equipment) required for the execution and completion of the Works and the remedying of any defects.

1.1.13 PERMANENT WORKS means the permanent works to be designed and executed in accordance with the Contract.

1.1.14 SITE means the places provided by the all Employer where the works are to be executed and to which Plant and Materials are to be delivered, and any other places as may be specifically designated in the Contract as forming part of the Site.

1.1.15 TAKING-OVER means that fabrication, construction, tests and adjustments have been completed in accordance with the requirements specified in the Contract and the Works taken over pursuant to the provisions of Article 19 hereof.

1.1.16 TIME OF COMPLETION means the time for completion of the Works as stated in the Appendix 6 (Schedule Of Construction For Single Cycle Gas Turbine Power Plant) to the Contract, including the any extended time thereto from time to time approved by the Employer

1.1.17 MONTH means calendar month according to the Gregorian Calendar

1.1.18 EFFECTIVE DATE means the date on which the Contract entered into legal force and effect

1.2 INTERPRETATION

Words importing party or parties shall include firms and corporations and any organization having capacity. Words importing the singular also include the plural and vice versa where the context requires. Words importing one gender also include the other gender.

Where the words "directed", "required", "approved", "accepted", "permitted" or similar terms are used, the "direction", "request", etc. shall be understood to mean "by the Employer".

ARTICLE 2 SCOPE OF THE CONTRACTOR'S SUPPLY

Under the Contract, the Contractor shall furnish the Works on a turn-key basis comprising both the following content and the content as described in the Works and Supply Scope of the Brief Description (Appendix 2) hereof:

2.1 Design and Technical Documentation:

The Contractor shall supply the design of all departments of the contracted single cycle gas turbine Power Plant in aspect of fuel resources, water, process of power plant and utilities, mechanical and electrical, automation and instrumentation, lighting system within the power plant boundary and design of civil engineering of power plant and the technical documents as listed in Article 8 hereof, with provisions to convert to combined cycle in future.

2.2 Equipment and Materials:

The Contractor shall supply the equipment and materials as listed in the Appendix 4 of the Contract including electrical equipment and instrument, electric wire and cable, lighting equipment within the Power Plant boundary, refractory and thermal insulate materials, and spare parts for two (2) years' normal operation.

2.3 Erection, Commissioning of Equipment and Training:

The Contractor shall be responsible for the erection, commissioning and test running of the equipment and provide training service to the Employer's personnel in China and on Site as per the provisions of Article 9 hereof.

2.4 Civil Engineering Works:

The Contractor shall supply all civil engineering construction materials and finish the civil Engineering works construction including road, building and equipment ordinary concrete foundations, stack and administration offices building within the Power Plant boundary but excluding materials and works for both (A) the Site's soil survey, soil test prior to detailed design and during construction course and (B) the ground treatment engineering including piling foundation of both building and equipment below their ordinary concrete foundations if any and if required.

2.5 Irrespective of the above terms of this Article 2, the supply and erection of the outgoing high voltage cable from the stepup transformer within the Power Plant boundary to the external grid outside and adjoining the Power Plant boundary shall be for the Employer's account.

ARTICLE 3 CONTRACT PRICE AND TERMS OF PAYMENT

As full compensation for the performance of the Works and the fulfillment of obligations of the Contractor under the Contract, the Employer shall pay to the Contractor the total Contract Price of United States Dollars One Hundred Sixty-six Million Seven Hundred Twenty-four Thousand Five Hundred and Seventy-eight only (USD166,724,578) and its relative interest as stated in Appendix 7 (Payment Schedule and its Quotation Sheet) of the Contract.

All payment of the total Contract Price shall be made in the currency of United States of America.

The Contractor shall apply for government loan for the project finance from the China Eximbank in seller's credit form.

The payment under the seller's credit terms shall be made in the following rates and manners:

3.1 For and under seller's credit payment terms
The deposit and prepayment, repayment of principal and interest under seller's credit payment terms shall be made as follows and as per Appendix 7 – Payment Schedule hereof:

3.1.1 The Employer shall pay United States Dollars Sixty-two Million Six Hundred Thirty-two Thousand Nine Hundred and Fifty-three only (USD62,632,953) to the Contractor as deposit and prepayment by telegraphic transfer within ninety (90) days upon receipt of the approval of the relevant institutions and government authorities as stated in the terms of (b) and (c) of Article 35 of this Contract against Contractor's submission of a bank guarantee undertaking to refund the deposit and prepayment together with its interest at six and half percent (6.5%) per annum in event the Contractor failed to ship, consign the Plant onboard for the Work solely because of his own fault upon receipt of the letter of credit and repayment guarantee, insurance policy certificate as stated in terms 3.1.2 and 3.6 hereof whereas delay of the shipment and partial shipments shall not be deemed as the Contractor's own failure.

3.1.2 The remaining of the total Contract Price, namely United States Dollars One Hundred and Four Million Ninety-one Thousand Six Hundred and Twenty-five Only (USD104,091,625) shall be paid under credit terms. The Employer shall within thirty (30) days after making the deposit and prepayment as stipulated in terms 3.1.1 hereof establish an irrevocable without recourse usance letter of credit by Central Bank of Nigeria accompany with an irrevocable repayment guarantee issued by the Federal Ministry of Finance of Federal Republic of Nigeria in favour of the Contractor for the amount of United States Dollars One Hundred Twenty-six Million Eighty Thousand Nine Hundred and Eighty-one only (USD126,080,981) being the repayment of the principal and its interest as specified in the Appendix 7 Payment Schedule hereof. The letter of credit shall contain the terms conditions wordings which are acceptable by the Contractor and shall be valid till the sixth (6th) month after the final installment of the repayment and shall permit payments in the following manner and as per the attached Appendix 7 Payment Schedule.

(a) Repayment of the principal of United States Dollars One Hundred and Four Million Ninety-one Thousand Six Hundred and Twenty-five Only (USD104,091,625) of the total Contract Price shall be made by the Employer to the Contractor in fourteen (14) bi-annual installments commencing from the twenty-fifth (25th) month after the contract becomes effective as stipulated in Appendix 7 Payment Schedule hereof.

(b) Interest on the aforesaid principal at six and half percent (6.5%) per annum covering the specified period totaling United States Dollars Twenty-one Million Nine Hundred Eighty-nine Three Hundred and Fifty-six only (USD21,989,356) shall be made by the Employer to the Contractor bi-annually together with the repayment of the principal as stated in the terms of 3.1.2 (a) .and in Appendix 7 Payment Schedule hereof.

3.2 If the Employer makes late payment for any part of installment and payment, the Contractor has the right to receive and the Employer shall be obliged to pay additional interest at six and half percent (6.5%) per annum as penalty.

3.3 When making the payment, the bank fees for the letter of credit issuing bank or paying bank will be borne by the Employer and the bank fees for the letter of credit negotiating bank will be borne by the Contractor.

3.4 The Contractor shall be entitled to forfeit the deposit and prepayment made to him by the Employer under the terms of 3.1.1 hereof, to terminate the Contract and to claim for loss and damage in event the Employer fails to establish the letter of credit and/or to provide the repayment guarantee within the specified time limit as stated in the above terms of 3.1.2 hereof and/or in the form, terms, wording as stated in terms of 3.5 hereof.

3.5 The form, terms and wording of all the Contractor's undertaking, the repayment guarantee of the Federal Ministry of Finance and the letter of credit as stated in this Article shall be drafted by the Contractor and subject to the approval of the Contractor's financing bank.

3.6 The letter of credit stated in terms of 3.1.2 of this Article shall be accompanied with the marine insurance policy certificates and their premium receipts as stipulated in terms of 4.8 hereof.

3.7 The Employer shall use the revenue of the sales of the Power Plant to repay the loan with top priority after deducting the Power Plant's normal overhead.

ARTICLE 4 GENERAL RESPONSIBILITIES OF THE EMPLOYER

Under the Contract, the Employer shall be responsible at his own cost and risk for the works and supply scope of both the following content and the content as described in the Works and Supply Scope of the Brief Description (Appendix 2) hereof:

4.1 The Employer shall be responsible for obtaining all permits and licenses from his Government authorizations concerned which are necessary for import and building up the Power Plant.

4.2 The Employer shall be responsible for acquisition of the lands and construction areas for the Power Plant and providing to the Contractor for construction.

4.3 The Employer shall assist the Contractor to arrange, before the time specified for delivery of any Plant and Contractor's Equipment to the Site, all consents, way leaves including passing through the territory of other countries (in event all the existing Nigerian international seaports of the appropriate capacity are not functioning), and approvals required in connection with the regulations and by-laws of local government or other authority which shall be applicable to the Works.

4.4 The Employer shall assist the Contractor on areas of documentation/permit during the transportation of all Plant and Contractor's equipment from the discharge port in Nigeria to the Site.

4.5 The Employer shall be responsible for surveying the source of fuels intended to use in this power plant, and for supplying of fuels.

4.6 The Employer shall provide the Contractor free of charge with complete, correct and necessary information regarding the geological, hydrological and meteorological etc. conditions of the Site, and extend assistance to the Contractor for inspection and survey of the Site.

4.7 The Employer shall provide assistance to the Contractor's personnel in arranging for entry permits/visas to Nigeria and ensure that they shall be entitled to access to the Site for performance of the Works.

4.8 The Employer shall cover at his own cost the marine cargo insurance including Institute Cargo Clauses (A) 1/1/82 and war, strikes, riots, civil commotions clauses, without deduction clause, at and from the Contractor's warehouse to the Site by vessel and by truck, open for full amount of shipments commencing from the letter of credit opening date and other clauses, conditions China Eximbank may request for a minimum value of one hundred and ten percent (110%) of the C&F cost of the Power Plant equipment materials under the Contract in the currency of United Sates of

America and the insurance policy shall state clearly, expressly and precisely that the Contractor of the above specified address is the policy holder and is the sole policy holder, and the Employer shall deliver the full set (original and duplicate) of the insurance policy certificate together with its premium payment receipt to the Contractor immediately when the letter of credit is opened as stated in the Article 3 of this Contract or the Contractor shall cover such insurances at such premium rate at the Employer's cost.

4.9 The Employer shall cover at his own cost the accident insurance for his personnel at the Site.

4.10 The Employer's liability and responsibility under this Contract shall remain wholly unchanged in event the title of possession of the Power Plant is partially and/or wholly transferred from the Employer to other third party before the total Contract Price is fully received by the Contractor unless such transfer of title of possession of the Power Plant is made with the consent of the Contractor in writing.

ARTICLE 5 PAYMENT OF INCOME TAX, ETC.

The Contractor shall be exempted from payment of all Nigeria taxes (including income tax, personal taxes profit tax and duties) and other taxes on income arising out of the Contract. If these taxes shall not be exempted under Nigeria tax ordinance, such taxes shall be borne by the Employer. The Contractor shall submit to the Employer all required information and documents as per Nigerian Income Tax rule and regulations excluding local employees of the Contractor.

ARTICLE 6 FOREIGN EXCHANGE, IMPORT DUTIES, TRANSIT DUTIES, CUSTOMS DUTIES, PERMITS AND CLEARANCE

6.1 The Employer shall be responsible for obtaining foreign exchange, import permits and all import clearance permits and all other permits, licenses or privileges, and the Employer shall pay all preshipment inspection fee, discharge port disbursement expenses but excluding unloading port shipside to the Site road transport, import customs duties, Value Added Tax (VAT), sales taxes and surcharges and other fees, costs and expenses applicable to the importation of all the Plant to Nigeria under the Contract, for which the Contractor shall submit to the Employer the shipping documents as stated in terms 13.2 hereof..

6.2 In case of any delay in obtaining such permits or payment of customs duties, etc., the Employer shall compensate the Contractor for any cost or loss including demurrage, wharf age or penalties etc. arising from such delay provided the shipping documents is sent by the Contractor as stated above.

6.3 For all Contractor's Equipment and appliances including heavy and light vehicles which are the property of the Contractor, necessary to be used at the Site in order to properly perform the Works, and which ultimately will be re-exported on completion of the Works (excluding consumable/ expendable items, disposable goods, etc.), the Contractor will submit a detailed list of such equipment and appliances to the Employer before shipment. The Employer shall certify the list and be responsible for obtaining all necessary import permits and tax exemption from the authorities concerned as per existing rules. The Employer shall assist the Contractor in the re-export of such equipment and appliances after completion of the Works.

6.4 The Employer shall assist the Contractor in obtaining the privileges of duty free shopping and exemption of taxes and duties for importation of project vehicles and appliances.

ARTICLE 7 SPARE PARTS

7.1 The Contractor shall furnish the spare parts, which shall serve the equipment furnished under the

Contract, adequate for two (2) years' operation under normal operation condition as per the Contractor's experience.

7.2 The spare parts will be delivered to the Site along with the delivery of equipment, except for refractory etc.

7.3 Such spare parts shall be supplied by the Contractor within the Contract Price.

7.4 Should any additional spare parts be requested by the Employer, the additional quantities of the same shall be supplied by the Contractor to the Employer with extra charge to the Employer, at a rate to be agreed upon by both parties.

ARTICLE 8 TECHNICAL DOCUMENTATION

The technical documents provided by the Contractor to the Employer under the Contract includes drawings (blueprint in 4 copies), written expositions (4 copies) and installation/ operation/ maintenance instruction manuals for major equipment (2 sets).

8.1 The preliminary design documents shall be submitted to the Employer for confirmation three (3) months after the Contract enters into effect and the Employer shall confirm it within two (2) weeks on submission, including:

(a) Instruction manual of preliminary design
(b) Layout of the power plant
(c) Process flow sheet
(d) Equipment list
(e) System drawings of water supply and sewerage
(f) System drawings of power supply and distribution
(g) System drawings of automatical control

8.2 The detailed design documents shall be submitted to the Employer in approximately three (3) lots respectively latest four (4), seven (7) and ten (10) months after the confirmation of preliminary design documents by the Employer, including:

(a) Layout of working area of the power plant
(b) Transportation drawing of the power plant
(c) Drawings for the civil engineering
(d) Pipe net arrange drawings of water supply and sewerage of the power plant
(e) Layouts of working shops for the whole power plant
(f) Process arrange drawings of the working shops
(g) Process flow sheet
(h) Non-standard parts
(i) Civil engineering drawings of electrical, automatical, water supply and sewerage and ventilating
(j) Instruction manual of production and operation for main working shops

8.3 The installation/operation/maintenance manuals for major equipment will be provided along with the delivery of equipment.

8.4 All the technical documents shall be in English language and in metric measuring.

ARTICLE 9 TRAINING OF EMPLOYER'S PERSONNEL

Training of the Employer's personnel includes training in China and also on Site. The Employer's personnel shall be qualified to be trained by the Contractor and they shall be fixed to participate in

commissioning and test running of the power plant. All the training shall be conducted in English Language.

9.1 Training in China

9.1.1 The Contractor shall provide appropriate training to Employer's personnel in operation and maintenance on major equipment in the power plant similar to the contracted power plant. The training including visiting, practically operation and substance explanations etc.

9.1.2 The Contractor shall notify the commencement date of training to the Employer at least three (3) months before the actual commencement of training to enable the Employer to finalize all formalities relating to training in China.

9.1.3 The Contractor agrees to accept total twenty (20) numbers of the Employer's personnel to be trained in China. The total person (man or women) /month is as listed below:

Profession	Man/Woman	Month	Person/Month
Process Engineer	4	3	12
Mechanical Engineer	6	3	18
Electrical Engineer	4	3	12
Instrumentation Engineer	2	3	6
Shift Supervisor	4	3	12
Laboratory chemistry engineer	nil	nil	nil
Total	20	3	60

9.1.4 The Employer shall bear the expenses of air tickets from Nigeria to the place of power plant in which the training taking place and back for all the trainees.

9.1.5 Expenses of Hotel/accommodation, local transportation and food charges occurred in China for all the trainees during the period of training shall be provided by the Contractor.

9.1.6 The Employer shall take out necessary insurance for the trainees for all period of training in China. If any one of the trainees falls ill or injured, the Contractor shall arrange him to the hospital for treatment and provide necessary help for better treatment. The medical expenses shall be borne by the Employer. The Contractor shall take necessary measures to ensure the security of the trainees during their stay in China.

9.1.7 Throughout the training in China, the trainees shall comply strictly with and observe all rules and regulations of the power plant and the laws and regulations of China. The Contractor shall not be responsible for any damage, loss suing and proceedings arising from any trainees if it is not by the reason of the Contractor.

9.2 Training on Site - The Contractor shall arrange appropriate training of twenty (20) local employees at Site one (1) year prior to the commissioning and test running, including theoretical lecture and practically operation. During the period of commissioning and test running, the Contractor's engineers shall supervise the competent trainees to operate and maintain the major equipment.

ARTICLE 10 DESIGN LIAISON

10.1 The design of the power plant shall be carried out in two stages of preliminary design and detailed design. The preliminary design will be finished in three (3) months after effectiveness of the Contract and the final lot of detailed design will be finished in seven (7) months after the preliminary design by the Contractor.

10.2 Both parties shall participate in three (3) design liaison meetings as follows:

10.2.1 The 1st design liaison meeting will be held in Nigeria within thirty (30) days after the Contract comes into force. The Contractor shall dispatch his team of technical personnel to the Site to have the site investigation including collecting the information for design and civil works, reviewing the foundation design conditions etc. During their visit, the Contractor's team shall also discuss with the Employer the general layout and technical process of the contracted power plant, the ways of supplying fuels, water, electricity and compressed air etc. After all these points are confirmed by both parties, the complete details will be the basis for the Contractor's design.

10.2.2 In the fourth (4th) month after the Contract comes into force, the two parties shall hold the 2nd design liaison meeting in China. The Contractor shall provide the Employer with the drawings and documentation of the preliminary design. The Employer shall exam and confirm the preliminary design. If any suggestions are put forward by the Employer, the Contractor shall give the full consideration.

10.2.3 The 3rd design liaison meeting will be held in Nigeria latest in the eleventh (11th) month after the Contract comes into force. The Contractor shall make explanation of the detailed design to the Employer if change of preliminary design was agreed during the 2nd meeting by both parties.

ARTICLE 11 PROGRESS MEETINGS

11.1 Monthly progress meetings shall be held at the Site between the representatives of the Contractor and the Employer.

11.2 These progress meeting shall be mainly for the following purposes:

11.2.1 To review the progress of the Works, chalking out further programme and coordinate the work at the Site.

11.2.2 To resolve any holdups and deal with any matter relating to a smooth execution of the Works.

11.3 The above meetings shall be convened by the Employer, who will prepare minutes of the meetings and distribute them to all the parties concerned.

11.4 In addition to the above monthly meetings, the Employer and the Contractor may call meetings at suitable intervals for the general review of the Works.

ARTICLE 12 PACKING, TRANSPORTATION AND MARKING

12.1 All equipment and materials, together with the installation/operation/maintenance manuals for major equipment and packing lists shall be carefully boxed, crated or otherwise adequately protected including bulk packaged for overseas shipment. Any equipment and materials that may be damaged by water or high humidity shall be encased in watertight and/or airtight rugged boxes. All pipe and fittings shall be shipped in bulk packages and/or in a suitable manner by the Contractor.

12.2 Transport of Equipment and Materials

12.2.1 The contractor shall be responsible for the marine transportation onboard ocean going liner, bulk and/or chartered vessel(s) at the Contractor's option of all Plant including spare parts and the Contractor's Equipment from their place of origin direct or transit to a main seaport in Nigeria at the Contractor's discretion on C&F basis. All the costs related thereto, such as packing and the like shall be at the Contractor's expense.

12.2.2 The Contractor shall be responsible for unloading from the carrying vessel and inland transportation of the Plant, including spares and the Contractor's equipment at and from the main seaport in Nigeria to their exact point of utilization at the Site as designated by the Contractor within a reasonable period commencing from the carrying vessel's arrival at the destination.

12.2.3 The Contractor shall be responsible for surveying the condition of road and availability of the loading and unloading facilities which will be utilized in connection with the inland transport operation and taking appropriate measures to avoid any damaging happening.

12.2.4 The Employer shall be responsible for security arrangement with all authorities concerned and arranging related formalities for the inland transportation from a main sea port, Nigeria to the Site.

12.2.5 The Contractor shall take care that machinery is disassembled into components as far as possible so that their size and weight are in line with actual transport possibilities, and advise the Employer before shipment of the heaviest and largest items of Plant and the Contractor's Equipment.

12.2.6 The Contractor shall notify the Employer the particulars of delivered for each consignments immediately after the issuing of each Bill of Lading by facsimile.

12.3 Marking

12.3.1 All special handling instructions such as how to keep the package upright, place for slings, whether the package needs special handling etc. shall be clearly marked in English on the package in suitable stenciled block letters in black paint.

12.3.2 The Plant, equipment and materials shall be shipped with the following marking in English:

Contract No:	TPP335/0202/CMEC/NG
Port of Destination:	Lagos/Apapa
Name of equipment	
Box No:	
Gross Weight:	
Net Weight:	
Dimensions:	
Country of Origin:	People's Republic of China
Consignee:	NATIONAL ELECTRIC POWER AUTHORITY CORPORATE HEADQUARTERS, PLOT 441, ZAMBERI CRESCENT, MAITAMA, ABUJA, FEDERAL REPUBLIC OF NIGERIA

ARTICLE 13 SHIPPING DOCUMENTATION

13.1 The Contractor shall submit full set of non-negotiable shipping documents by airmail and registered post or by courier to the Employer within ten (10) days after the date of each Bill of Lading.

13.2 The Contractor shall submit through his bank to the Employer's letter of credit opening bank full set of the negotiable shipping documents containing the following:

(a) Three/three originals/ non-negotiable copies of clean on board ocean liner/chartered bill of lading marked freight prepaid and made out to order, blank endorsed and notify to the Employer
(b) Six copies of commercial invoice covering the relevant amounts
(c) Six copies of combined certificate of value and of origin and invoice covering the relevant amounts
(d) Six copies of packing and weight list
(e) Two copies of quality certificate issued by each of equipment the manufacturer(s) or supplier(s)
(f) Two copies of preshipment inspection report (either clean report of finding or non-negotiable report) if applicable.

ARTICLE 14 UNLOADING AND STORAGE AT SITE

14.1 The Contractor shall be responsible for unloading of all Plant, equipment and materials, including the Contractor's Equipment at the Site to the areas designated by the Contractor.

14.2 Items for permanent installations shall be properly stored and protected by the Contractor to prevent damage or deterioration of any type.

14.2.1 Items stored shall be blocked off the ground.

14.2.2 Motors, valves, gauges, instruments, computer facilities etc. shall be stored indoors in a warehouse provided by the Contractor.

14.2.3 Thermal insulation shall be stored indoors in the warehouse provided by the Contractor or otherwise protected against water damage.

14.3 The Employer shall after his Taking Over allow the Contractor to store at the Site at free cost any tools, materials surplus and equipment supplied and used by the Contractor for the civil engineering, erection, installation and test running Work and for other applications and to remove them from the Site at any time at Contractor's discretion. The tools, materials surplus and equipment of this nature and application shall remain on Contractor's property wholly and absolutely.

ARTICLE 15 CONTRACTOR'S SUPERINTENDENCE AND INSPECTION

15.1 The Contractor shall appoint his representative to act as the superintendent in charge of the Works before the Works is commenced on the Site and shall notify the Employer accordingly.

15.2 The Contractor's representative shall keep in charge on the Site continuously from the time the Works is commenced until it is Taken Over. If the Contractor's representative is needed to be changed, the Contractor shall notify the Employer before such change and meet the approval of the Employer.

15.3 The Contractor's representative shall carefully examine the drawings and technical specification and supervise the Works of the workmen or others responsible to the Contractor. He shall also work in harmony with the personnel of the Employer.

15.4 Until the Taking Over Certificate shall have been issued, the Contractor shall have the right of access, at all reasonable working hours and his own risk and expense, by himself or his duly authorized representatives, whose names shall have previously been communicated in writing to the Employer, to all parts of the Works for the purpose of inspecting the working thereof and to records of the working and performance thereof and for the purpose of inspecting the same and taking notes therefrom. Subject to the Employer's approval (which shall not be unreasonably withheld), the Contractor may at his own risk and expense make any tests which he considers desirable.

15.5 Burswood Limited Hongkong which have been developing, facilitating the project from the primary stage shall act as consultants of the project continuously and automatically throughout the whole construction course.

ARTICLE 16 ACCOMMODATION AND OFFICE FOR CONTRACTOR

16.1. The Contractor shall build at his own cost bachelor hostel/standard type residences with all fixed building services for use by his staff. The land located as close to the Site, electric and fresh water supply sources as possible for such buildings would be provided by the Employer at free cost.

16.2 Air conditioners, refrigerators and other household equipment shall be arranged by the Contractor at his own cost. The Employer shall be responsible for obtaining the exemption of payment of Customs Duty and Sales Tax, etc., on import of air conditioners, refrigerators and other household equipment as well as light and heavy vehicles as per existing rules.

16.3 The Employer shall provide the Contractor, at Site free of charge a field office with two (2) telephone lines (international communication service) and one (1) fax line so that the Contractor's representative can connect with his Head Office and the Employer.

16.4 The temporary houses excluding movable and mobile houses and civil structure to be built by the Contractor during the Power Plant construction period shall become property of the Employer after the Power Plant is taken over by the Employer finally in 'asis' condition.

ARTICLE 17 ELECTRICITY, WATER AND FUEL SUPPLY

17.1 Electricity

The line of demarcation of electricity under the Contract is the boundary wall of the power plant. The Employer shall be responsible for supplying a power source of 3 phases, 11KV-33KV, 50 Hz at one point outside of the boundary wall designed by to the Contractor. The Contractor shall furnish and install the electric connection, step-down transformer, meters, switches and electric protective devices within the boundary of the power plant. The Contractor should, however, consider the arrangements for additional requirements to safeguard against unforeseen and unavoidable power breakdowns.

17.2 Water

The line of demarcation of water under the Contract is the boundary wall of the power plant. The Employer shall be responsible for supplying a water source at one point outside of the boundary wall designed by to the Contractor. The Contractor shall be responsible for joining the water pipe at the same location and arrangement of the industrial-purposed water within the boundary of the power plant.

17.3 Fuel

The gas will be the fuel for the power plant. The Employer shall be responsible for supplying and transportation of the gas to the place designed by the Contractor.

ARTICLE 18 WARRANTY, GUARANTEES FOR MATERIALS, WORKMANSHIP AND PERFORMANCE

18.1 The Contractor shall guarantee that the materials and workmanship incorporated into the Works are new and according to the latest Chinese practice and standards and the best of their respective kinds for the services intended and that all items will be free from inherent defects in the design, workmanship and materials.

18.2 If, during the guarantee period of twelve (12) months from the date of Taking Over Certificate, the Employer finds that any part of the Plant is defective in the equipment under proper use and arising solely from faulty design, materials or workmanship, the Employer shall give written notice to the Contractor stating the nature of such defect before fourteen (14) days from the expiry date of the guarantee period. Upon receipt of such notice, the Contractor shall be responsible for, with all possible speed repairing or replacing the defective part.

18.3 If it becomes necessary for the Contractor to replace any defective part of the Plant under the terms of 18.2 of this Article, the provisions of this Article will apply to the part of the Plant so replaced until twelve (12) months from the date of replacement of such part.

18.4 The return of defective part to the Contractor's factory shall be the Contractor's responsibility and shall be made at his expense. The Employer shall, however, render such assistance as necessary to expedite the same. If the defective parts are caused by the Employer, the replacement of such defective parts shall not be the Contractor's responsibility.

18.5 If the Employer think that the replacement or renewal is of such a character as may affect the efficiency of the Plant, the Employer may give to the Contractor within one (1) month of such replacement or renewal, notice in writing that performance tests will be made. Should such tests show that the Plant sustain the guarantee of the Contract, the cost of tests shall be borne by the Employer. Should the guarantee not be sustained, the cost of the tests shall be borne by the Contractor. In case such performance test is carried out, reasonable tolerance shall be allowed to compensate for deterioration in performance after some period of commercial operation.

18.6 The guarantees of the Contractor under this Article does not cover any defects or failure occurring after the Works has been taken over due to, but not limit to:

(a) faulty use of the Plant by the Employer;
(b) abnormal operating conditions;
(c) faulty maintenance by the Employer or any third party;
(d) alteration carried out without the Contractor's consent in writing;
(e) repairs carried out improperly by the Employer or any third party;
(f) damage to the Plant and/or any machinery, equipment, apparatus of the Plant caused by the events stated in the terms of 30.6 hereof..

provided that disputes arising in ascertaining causes of defect will be referred to the arbitration conditions as stated in Article 32 hereof.

18.7 The Contractor shall warrants that the air filter shall be suitable for the Nigerian weather conditions

18.8 The Contractor shall allow the Employer's Representative to witness a minimum of four (4) final tests (each time maximum two persons and five days) of the Plant at the manufacturers' work and their Nigeria airport – Beijing airport return airfares shall be borne by the Employer while travel, lodge, feeding costs in China shall be borne by the Contractor; In event the Employer failed to send his Representative to attend such test upon receipt of the Contractor's notice, such test shall be deemed as one of the four (4) tests to be witnessed under this terms.

ARTICLE 19 INSPECTION, TEST- RUN, PERFORMANCE GUARANTEE TEST AND TAKING OVER

The Contractor shall be responsible for inspection of equipment and running all the tests at the Site.

The Employer shall provide without charge electricity, water, compressed air and fuels etc., as may be reasonably required to conduct the startup and all the tests of the power plant.

Testing procedure concerning the performance guarantee test shall be determined by the Contractor and confirmed by the Employer before start of the performance guarantee test.

All instruments supplied by the Contractor to be used for the tests shall be checked and calibrated.

All test data shall be recorded by the Contractor and countersigned by the Employer.

The test result of performance guarantee test shall be calculated and compiled by the Contractor.

The performance output of the Power Plant including the Power Plant's internal consumption under the Contract shall be three hundred and thirty-five (335) megawatt only under International Standard Organization Conditions notwithstanding and irrespective of the surplus capacity of the Equipment of the Power Plant over-supplied by the Contractor.

19.1. Inspection and Test-run

19.1.1 After completion of erection and/or installation of equipment, the individual sections of the power plant such as gas turbine and other mechanical and electrical equipment etc. shall be thoroughly inspected and checked for correctness and completeness of installation and acceptability for placing in operation. The time consumed in inspection and checking of the equipment shall be considered as a part of the erection and/or installation period.

19.1.2 After satisfactory completion of the inspection and checking of the equipment, the test running without load of the machinery and equipment shall be carried out under the condition that the supply of electricity, water, compressed air and fuels etc. by the Employer meets the demand. After the test running without load is completed satisfactorily, the test running with load of the power production will be carried out in accordance with the standard of load by section until it comes to the rated load. Necessary adjustments or repairs etc. will be made as required.

19.2. Performance Guarantee Test

19.2.1 In the certain time of test running with load, the performance guarantee test shall be carried out on a time agreed by the Employer and the Contractor to determine whether the power plant complies with the guaranteed performance data set forth below.

19.2.2 The period for performance guarantee test per each and every set, section shall be two (2) month and two (2) times of performance guarantee test are permitted.

19.2.3 Should one or more guaranteed performance data for each and every set, section be not reached to that set forth below, the Contractor shall take all measures to correct the deficiencies and both parties shall decide a time for the second performance guarantee test in line with the actual circumstances. In this case, the Contractor shall not be liable for the liquidated damages.

19.2.4 Guaranteed performance data is set as follows

(a) Output of power: three hundred and thirty-five (335) megawatt only under ISO Conditions in pursuit of the Contract
(b) Test duration: one hundred and sixty-eight (168) hours continuously as stated in this Article.
(c) Guaranteed conditions: using natural gas of specified heat value as fuel, adopting ISO conditions.
(d) Power Consumption: 3.4 megawatt.
(e) heat efficiency: 31.2%

19.2.5 For the above guaranteed performance data, it shall be the average figure of one hundred and sixty-eight (168) hours continuous running records when the performance guarantee test is conducted in such a way that the fuels shall be the same in quality as the samples which are specified in the first design liaison meeting and thereafter supplied by the Employer to the Contractor. The Contractor shall not be liable for liquidated damages if the guaranteed performance data can not be reached during the period of performance guarantee test due to the reason that the conditions required for operation and performance guarantee test is not met.

19.3 Taking Over

19.3.1 After the guaranteed performance data is reached in performance guarantee test in accordance with the method stipulated in terms of 19.2. of this Article and the power plant runs stably and continuously for a period of one hundred and sixty-eight (168) hours and the output of eight (8) set each forty-one point eighty-nine (41.89) megawatt or total three hundred and thirty-five (335) megawatt under the ISO Conditions and under the Contract is reached, the test result of performance guarantee test shall be deemed as accepted. Then, the Employer shall issue to the

Contractor, within three (3) days after the one hundred and sixty-eight (168) hours continuous running, a certificate (therein called a Taking Over Certificate) in which the Employer shall certify the date on which the Works have been so completed by the Contractor, and the Employer shall be deemed to have taken over the Works on the date so certified provided that there are no pending items.

19.3.2 Should one or more guaranteed performance data of each and every set, section be still not reached to that set forth above within the period of four (4) months for performance guarantee test due to the Contractor's reason, the Contractor shall be liable for the liquidated damages to the Employer according to the stipulations of Article 20 hereof. The Works shall then be deemed to have been taken over by the Employer and the Employer shall issue a Taking Over Certificate to the Contractor within three (3) days after the Contractor has made the payment of liquidated damages.

Notwithstanding the aforesaid of the terms, the Contractor shall ensure that the rated output is met eventually.

19.3.3 If partial shipments are effected and the Works are divided into two or more sections - the Works of the Power Plant are thus divided into eight (8) sections in terms of eight (8) independent generating sets of same capacity and the erection commission of each section is four (4) months, the terms 19.3.1. and 19.3.2. of this Article shall apply to each section in a form of completion of partial Works and partial Taking Over - the Contractor shall be entitled to deliver and the Employer shall take over any section or sections before the other or others and thereupon the Employer shall issue a Taking Over Certificate in respect thereof; The Employer's final Taking Over Certificate for the Works of the final section or sections shall be deemed as Taking Over Certificate for the whole Works if the Works are so divided and Taking Over Certificate is duly issued by the Employer on completion of the previous Works of each and every section as stated in the this terms.

19.3.4 If by reason of failure of the Employer under Article 4, 16 and 17 of this Contract and/or by reason of any act of omission of the Employer or some personnel employed by the Employer, the Contractor is not able to commence, undertake and complete the erection and installation of the machinery, equipment and apparatus of the Plant partially or wholly within the specified work schedule period, the Employer shall be deemed to have taken over the Works and shall issue a Taking Over Certificate accordingly within ninety (90) days from the final scheduled test running date.

19.3.5 If by reason of failure of the Employer under Article 17 of this Contract and/or by reason of any act of omission of the Employer or some personnel employed by the Employer, the Contractor shall be prevented from carrying out the tests on completion unless in the meantime the Works shall have been proved not to be substantially completed in accordance with the Contract, the Employer shall be deemed to have taken over the Works and shall issue a Taking Over Certificate accordingly within ninety (90) days from the final scheduled test running date..

19.3.6 If the Plant and/or any machinery equipment apparatus of the Plant is damaged by the event as stated in terms of 30.6 hereof.and the productivity, quality, durability of the Plants and/or any machinery equipment apparatus of the Plant is not longer guaranteed, the Employer shall be deemed to have taken over the Works and shall issue a Taking Over Certificate accordingly on completion of test running of the Plant of whatsoever output and conditions the Plant and/or its machinery equipment apparatus can perform.

19.4 In event the Employer fails to issue any Taking Over Certificate to the Contractor in time according to the terms of 19.3 hereof, the Works shall be considered approved and accepted by the Employer and turned over to the Employer by the Contractor after ninety (90) days from the test is over or the Works being deemed to have taken over.

19.5 The Employer shall have the right to employ independent competent surveyor at his own cost to attend the performance guarantee test after giving ten (10) days notice to the Contractor in writing.

ARTICLE 20 LIQUIDATED DAMAGES

20.1 Liquidated Damages on Guaranteed Performance Data

20.1.1 Corresponding to the performance guarantee test and the guaranteed performance data set forth in Article 19 hereof, Should one or more guaranteed performance data be still not reached within the period of three (3) months for performance guarantee test due to the Contractor's reason, the Contractor shall be liable for the liquidated damages to the Employer according to the following terms 20.1.2 and under the terms of 20.3 hereof.

20.1.2 The maximum combined amount of liquidated damages to the guaranteed performance data shall not be over two percent (2%) of C&F Price of the Power Plant equipment supplied by the Contractor.

20.2 Liquidated Damages on Delay in Completion of the Works

20.2.1 The Contractor shall execute his best performance to complete the Works within the agreed time as stated in Appendix 6 (Schedule Of Construction For Single Cycle Gas Turbine Power Plant) hereof or within the any extended time for completion granted but he shall not be liable for the delay in completion of the Works under (a) and (b) of this 20.2.1 terms:

(a) The delay is caused by the late delivery of the equipment, materials needed for the Works by the carrying vessel and her agents, discharge port and wharf administration and whatsoever event, fault which is out of the Contractor's control under whatsoever circumstances

(b) The delay of any one or all of the first seven sections divided as stated in terms of 19.3.3 provided the final section or sections of the Works are completed within the agreed time as stated in Appendix 6 (Schedule Of Construction For Single Cycle Gas Turbine Power Plant) of the Contract.

20.2.2 The Contractor shall pay the Employer as liquidated damages and not as penalty as stated in terms of (a) and (b) of 20.2.2 hereunder in the event the Contractor fails to complete the Works, solely due to the Contractor's own fault and reason, in conformity with the agreed time stated in the Appendix 6 (Schedule Of Construction For Single Cycle Gas Turbine Power Plant) to the Contract or within the any extended time for completion granted:

(a) a sum of three percent (3%) per annum on the Employer's payment of deposit and prepayment amount as stipulated in terms of 3.1.1 hereof for the delay period if the Works are not divided into one or more section;

(b) If the works are divided into one or more section and one or some section has been taken over or is deemed to have been taken over by the Employer as stated in terms of 19.3.3 before the delay of the Works of the remaining final one section or final some sections, the Contractor shall pay for the delay period of the Works of the final one section pro ratio after deducting the accumulated period of advance completion of Works of previous sections (if any) in accordance with the formula hereunder but not exceeding the amount stated in the terms of 20.3 hereof under whatsoever circumstances: deposit prepayment amount / total number of section of Works divided X 3% /365 X (delay period of Works of final one section, day Less accumulated period of advance completion of Works of previous sections if any, day).

20.3 Maximum combined amount of liquidated damages
The maximum combined amount of liquidated damages to the guaranteed performance data and to the delay in completion of the Works as stated in terms of 20.1 and 20.2 hereof shall not be over three percent (3%) of C&F Price of the Power Plant equipment supplied by the Contractor

ARTICLE 21 EXTENSION OF TIME FOR COMPLETION

21.1 Works or any part thereof, whether such delay or impediment occur before or after the time or extended time for completion, provided that the Contractor shall without delay have given to the Employer a notice in writing containing full and detailed particulars of his claim for an extension of the time for completion, the Employer shall on receipt of such notice but not otherwise grant to the Contractor from time to time in writing either prospectively or retrospectively such extension of the time fixed by the Contract for the completion of the Works or any part thereof as may be reasonable.

21.2 Acquisition of the lands and construction areas for the power plant shall be made and delivered to the Contractor by the Employer within one (1) months after signing the Contract. If delay in such delivery of the lands and areas to the Contractor, the completion time of the Works will be extended accordingly.

21.3 If delay of the Works is caused by the event as stated in the terms of 30.6 hereof and/or by the event, fault as stated in the above terms of 20.2.1 (a) hereof, the completion time of the Works will be extended accordingly and the Employer shall be responsible for the extension.

21.4 If the land, field office, supply of electricity, water and gas as stated in Article 16 and 17 of this Contract will not be provided by the Employer according to the Contractor's request within the specified time limit and/or within the Schedule of Construction, the time of completion of the Works will be extended accordingly and the Employer shall be responsible for the extension.

21.5 If the Employer and/or his agents, employee fail to perform, execute his responsibilities as stated in terms 12.2.2 and Article 4 of this Contract within the time limit and/or within the Schedule of Construction, the time of completion of the Works will be extended accordingly and the Employer shall be responsible for the extension.

21.6 If delay of the Works is caused by any other fault, event and nature for which the Employer shall be responsible, the completion time of the Works will be extended accordingly and automatically.

21.7 The Employer shall pay to the Contractor an additional labour cost of U$200 per each calendar day per each person of the Contractor's personnel remaining at the Site of the Power Plant for each and every day of delay, including holidays in event of extension of Time of Completion caused by the delay, fault, event and whatsoever nature for which the Employer and his personnel, agents, etc shall be responsible and the payment in cash covering the estimated extension period shall be made by the Employer to the Contractor within seven (7) days before the extension work.

21.8 In event partial shipments of the Plant are effected by the Contractor and the Works are divided into two or more sections as stated in terms of 19.3.3 hereof - the Works of the Power Plant are divided into eight sections, the terms of 21.3, 21.4, 21.5, 21.6 and 21.7 hereof shall apply to each and every section of the Work accordingly and automatically.

ARTICLE 22 TERMINATION

22.1 The Contractor shall be entitled to terminate the execution of Contract by giving a written notice of termination to the Employer specifying the date upon which such termination becomes effective and the extent to which performance of the Works under the Contract is terminated if the force majeure pursuant to Article 31 hereof continues for a period of one hundred and twenty (120) days and provided that the effect of the force majeure is still continuing.

22.2 Upon any such termination, the Contractor shall:

22.2.1 immediately discontinue the performance of the Works on the date and to the extent as specified in the notice of termination;

22.2.2 place no further subcontracts for the Works and promptly make every reasonable effort to obtain cancellation upon terms satisfactory to Employer of all subcontracts to the extent they relate to the performance of the Works terminated;

22.2.3 assist the Employer, as specifically requested in writing by the Employer, in the maintenance, protection and disposition of the Plant;

22.2.4 turn over to the Employer the Plant, whether completed or not

22.3 upon any such termination, as the sole right and remedy of Contractor, the Employer will pay the Contractor an amount, upon a written claim submitted to the Employer by the Contractor, determined in accordance with the following:

22.3.1 all amounts not previously paid to Contractor for the work completed by the Contractor in accordance with the Contract prior to such notice of termination and for the work thereafter completed by the Contractor as requested by the Employer;

22.3.2 the actual and reasonable costs of settling and paying claims arising out of the termination of subcontracts pursuant to terms 22.2.2.of this Article;

22.3.3 the actual and reasonable costs incurred by the Contractor pursuant to terms 22.2.3. and 22.2.4.of this Article.

22.4 The foregoing amounts will include a reasonable sum, under all of the circumstances, as profit for the parts of the Plant satisfactorily furnished by the Contractor.

22.5 Both parties shall not be entitled to the anticipated profits.

22.6 The amounts determined pursuant to terms of 22.3 of this Article shall be subject to the accounting records submitted by the Contractor. The Employer may appoint an external auditor, at his own expense, to verify such amounts.

22.7 In the event that the parties are unable to agree upon such amounts of payment, then the aggrieved party may resort to Arbitration as provided for in the Article 32 hereof.

ARTICLE 23 CHANGES

23.1 In the event that a change is requested by the Employer during the execution of the Contract in any part of the Works, the Employer shall issue a written change notice in which the change is described to the Contractor.

23.2 The Contractor shall countersign the change notice and then proceed with the performance of the change if he has no dispute about such change.

23.3 If the Contractor believes that any such change will have an effect on the Contract Price, Time of Completion or any other obligations of the Contractor under this Contract, the Contractor may, within ten (10) days after receipt of the change notice, submit to the Employer an estimate of such effect on the Contract Price, Time of Completion or any other obligations of the Contractor. If the Employer confirms based on the estimate that the change will have such effect and such estimate is acceptable, the Employer shall, on mutual agreement, within seven (7) days, issue a change order to the Contractor in writing containing actual and reasonable adjustments on the Contract Price, Time of Completion or any other obligations of the Contractor under this Contract.

23.4 The Contractor may object to a change requested by the Employer if performance of the change would:

23.4.1 prevent or substantially prejudice the Contractor from or in fulfilling any of his other obligations under this Contract.

23.4.2 require the Contractor to act in breach of any enforceable undertaking or agreement with a third party or cause him to infringe any patent, registered design, copyright or other protected right of any third party;

23.4.3 require the Contractor to do the work or to exercise skills which are not of the kind that the Contractor normally does or exercises.

ARTICLE 24 LANGUAGE

24.1 The official language for general correspondence, technical information and data, instruction manuals, literature, pamphlets, drawings, standards and test data shall be exclusively in English. Shipping marks and instructions on individual packages shall be printed in English.

24.2 The Contract shall be construed and interpreted according to the English language.

ARTICLE 25 COMPLIANCE WITH LAWS

25.1 The international laws and regulations shall be applied to the Contract.

25.2 Throughout the performance of the Works, the Contractor shall comply strictly with and shall ensure that his employees, workmen and servants shall comply strictly with and observe all applicable laws, rules and regulations in Nigeria.

ARTICLE 26 CONFIDENTIALITY AND NONDISCLOSURE

26.1 The Employer agrees that he shall not pass to any third party, without prior written consent of the Contractor, on any technical information of the power plant or know-how employed therein which he obtains in connection with the execution of the Contract.

26.2 The Employer shall use his best efforts to restrain his employees from making such disclosures to others for any purposes other than those provided for in the Contract.

ARTICLE 27 PATENT RIGHT

27.1 The Contractor shall save harmless and indemnify the Employer from and against all claims or proceedings for or on account of infringement of any patent rights, design, trade mark or trade name or other protected right in respect of any Plant, equipment, workmanship or materials used for the purpose of or in connection with the Contract. In case of such claims or proceedings, the Employer shall give notice of such claims or proceedings to the Contractor to deal with.

27.2 All patent rights used by the Contractor to the Works shall be protected and the Employer shall not disclose or assign such patent rights to any third party.

ARTICLE 28 ASSIGNMENT AND SUBLETTING

28.1 The Contractor shall not assign the Contract or any part thereof or any benefit, obligation or interest therein or thereunder (other than an assignment or a charge in favour of the Contractor's Bankers of any money due or to become due to Contractor under the Contract) without the prior written consent

of the Employer.

28.2 Except where otherwise provided by the Contract, the Contractor shall submit a list of the Sub-Contractor to the Employer when it is necessary to sublet the Contract work. Should the Employer have any comments or objections to the list of the sub-Contractor provided by the Contractor, the Employer shall inform the Contractor within ten (10) days on receipt of the said list. The said list shall be considered approved and accepted by the Employer if no notice is given by the Employer to the Contractor within the said period. However such subletting shall not relieve the Contractor from any liability or obligation under the Contract, and he shall be responsible for the acts, defaults and neglects of any sub-Contractor, his agents, servants or workmen. The provision of labour on a piece work basis and procurement of miscellaneous materials shall not be deemed to be a subletting under this Article.

ARTICLE 29 EMPLOYERSHIP OF POWER PLANT

The Power Plant supplied to the Employer pursuant to the Contract shall become the property of the Employer after the issuing of Taking Over Certificate of the Works.

ARTICLE 30 LIABILITIES, INDEMNITIES FOR ACCIDENTS AND DAMAGES

30.1 The Contractor shall properly cover up and protect until taken over hereof, any section or part of the Works from injury by exposure to the weather and shall take every reasonable precaution to protect any section or part of the Works not taken over against loss or damage from any cause.

30.2 In the case of any loss of or damage to the Works on the Site arising from or occasioned by causes for which the Contractor is not responsible under the Contract, the same shall, if required by the Employer, be made good by the Contractor but at the cost of the Employer, at a price to be agreed between the Contractor and the Employer or in default of agreement to be settled by arbitration.

30.3 The Contractor shall not be liable to the Employer for:

30.3.1 any damage or injury to the extent that it is caused by or arises from the acts or omissions of the Employer or of others (not being the Contractor's servants or Sub-contractors).

30.3.2 any loss or damage in circumstances over which the Contractor has no control as per provision of Article 31 (Force Majeure) hereof.

30.4 The Contractor shall cover in China or in Nigeria or in elsewhere at his discretion at his own cost third party liability insurance of the Works at the Site for the whole construction period before Taking Over by the Employer for a maximum liability of United States Dollars One Million Only (USD1,000,000) or equivalent in the local currency at an exchange rate of USD1 = Naira 115 stating the Contractor as policy holder and a certified true copy of the insurance policy certificate shall be delivered to the Employer; This independent insurance shall not be applicable if it is covered in and is part of the erection all risks insurance as stated in terms 30.5 (a) hereof and the liability remains the same.

30.5 The Contractor shall cover in China or in Nigeria or in elsewhere at his discretion at his own cost the following insurances stating the Contractor as policy holder and a certified true copy of the insurance policy certificate together with its premium payment receipt shall be delivered to the Employer within one (1) month after the first partial shipment:

(a) erection all risks including war, strikes, riots, civil commotions risks insurances in the currency of United Sates of America for minimum one hundred and ten percent (110%) of the total Contract Price of the Works without deduction clause and

(b) insurance for his own equipment and materials being kept and stored at the Employer's site.

30.6 The Contractor shall be entitled without prejudice its rights and remedies to refuse to install, erect, repair, commission, test run the Plant and/or any machinery, equipment, apparatus of the Plant which is damaged by carriage, handling, loading, unloading, delivering and storing by the carrying vessel and her agents, port wharf and customs administration, inland road transport truck, the Employer and/or his agents, employees and any third party; In event the Contractor do install, erect, repair, commission, test run such damaged Plant and/or any machinery, equipment, apparatus of the Plant on request of the Employer, the Employer shall be responsible for all whatsoever risks and consequences caused therefrom and thereupon, the Contractor shall under whatsoever circumstances not be responsible for the productivity, quality and durability of such damaged Plant, machinery, equipment and apparatus; And in event delay of the Works is so caused thereupon, the completion time of the Works shall be extended accordingly and automatically and the Employer shall be responsible for the delay.

30.7 The accident and travel risks of the Contractor's personnel at the Site and working for the Works in Nigeria throughout the whole construction course shall be for the Contractor's own account and liability solely and absolutely.

30.8 In event of indemnity of damage to and loss of the Plant and of the Works made by the insurance company, the Contractor shall after deduct his Contract Price and its interest at six and half percent (6.5%) and other costs incurred, pay the balance to the Employer.

ARTICLE 31 FORCE MAJEURE

Should the Contractor be obstructed or delayed in the commencement performance or completion of the Works under the Contract by unavoidable acts or circumstances such as riot, insurrection, war directly affecting the Works, strikes, blockade, revolution, civil commotion, pestilence acts of public authorities, fire, explosion, lightning, earthquake, cyclone, tidal waves, typhoons, hurricanes, tornadoes, floods, epidemics, quarantine, or similar causes not caused by and beyond the reasonable control of the Contractor, the time for completion of the Works will be extended for a period equivalent to the time during which the Works as whole has been delayed for the said reason provided that within fourteen (14) days after the occurrence of the force majeure, the Contractor submits to the Employer a notice in writing stating in detail the reason for each delay of completion caused by force majeure. The Employer shall relieve the Contractor from liquidated damages and not be entitled to make any claim for any loss sustained by such delay. However, for delays by the Contractor which may result directly or indirectly from his negligence, mistakes and improper cooperation, the time for completion of the Works shall not be extended.

ARTICLE 32 SETTLEMENT OF DISPUTES - ARBITRATION

32.1 In the event of any dispute, difference or contention in the interpretation or meaning of any of the articles to the Contract or reasonable inference therefrom, both parties shall promptly make endeavour to resolve the dispute or difference by mutual discussion.

32.2 Should this discussion does not lead to a agreement between the parties within eight (8) weeks after the occurrence of the dispute or difference, any dispute, controversy or claim arising out of or the breach, termination or invalidity of the Contract shall be settled by arbitration in accordance with the UNCITRAL Arbitration Rules as at present in force, and the arbitration shall be taken place in London, United Kingdom.

32.3 In the course of arbitration, the Contract shall be executed continuously by both parties except the part(s) under arbitration.

32.4 No payment due or payable by the Employer to the Contractor shall be withheld on account of pending reference to arbitration.

32.5 The official language of arbitration shall be the English language.

32.6 The arbitral award shall be final and binding upon both parties.

32.7 The arbitration fee shall be borne by the losing party.

ARTICLE 33 LIMITATIONS OF CONTRACTOR'S LIABILITY

33.1 Subject as provided in Article 20 hereof for the deduction of liquidated damages, the Contractor shall not be liable to the Employer by way of indemnity or by reason of any breach of the Contract for loss of use (whether complete or partial) of the Works or of profit or of any Contract loss and damages that may be suffered by the Employer.

33.2 The scope of the project is subject to the Scope of the Contractor's Supply of the Contract. The Contractor's total liability to the Employer under this Contract shall be no more than three percent only (3%) of C&F Price of the Power Plant equipment supplied by the Contractor.

33.3 The Contractor shall within one (1) month upon receipt of the deposit prepayment from the Employer submit a performance bond covering the Contractor's maximum liability as specified in terms 33.2 hereof; The performance bond shall be issued by a bank and valid for a period of twelve (12) months commencing from Taking Over of each unit section of the Power Plant by the Employer; The form, terms and wording of such performance bond shall be drafted by Bank of China.

ARTICLE 34 NOTICES

All communications and notices for the purpose of the Contract shall be in writing and given by delivering the same or by sending the same by air mail post, telex or facsimile to the address stated below:

Employer:

Name	NATIONAL ELECTRIC POWER AUTHORITY
Full address	Corporate Headquarters, Plot 441, Zamberi Crescent, Maitama, Abuja, Federal Republic of Nigeria
Email:	
Fax:	

Contractor:

Name	CHINA NATIONAL MACHINERY AND EQUIPMENT IMPORT AND EXPORT CORPORATION,
Full address	178, Guang An Men Wai Street, Beijing, People's Republic of China
Email:	caoyj@mail.cmec.com and/or maxc@mail.cmec.com
Fax:	0086-10-63479248 and 63268203.

ARTICLE 35 EFFECTIVENESS OF THE CONTRACT

The Contract will come into effectiveness upon fulfillment of all the following:

(a) The contract is signed by both the Contractor and Employer

(b) The contract and its request are approved by the Employer's government relevant authorities institutions including Federal Ministry of Finance, Central Bank of Nigeria, etc as stated in Article 3 of this Contract, etc.

(c) The contract and its credit application are approved by the Chinese government relevant authorities, institutions including State Council, China Eximbank, export credit insurance company.

(d) The Contractor received the deposit and prepayment as stipulated in Article 3 of this Contract.

(e) The Contractor received both the letter of credit and repayment guarantee as stipulated in Article 3 of this Contract.

ARTICLE 36 FUTURE EXPANSION

The Employer shall give preference to the Contractor in event of expansion of the Power Plant in the future provided the price of the expansion of the Contractor is fair and reasonable, this Contract is well implemented and the Power Plant's performance is satisfactory.

IN WITNESS WHEREOF, the parties hereto have signed this Contract in duplicate originals under their respective hand as of the day and year first above written and each party hereto shall hold one original copy of the Contract.

(1) For and on behalf of the Employer's owner
FEDERAL MINISTRY OF POWER AND STEEL,
FEDERAL REPUBLIC OF NIGERIA

Dr Olusegun Agagu, Honourable Minister

(2) For and on behalf of the Employer
NATIONAL ELECTRIC POWER AUTHORITY,
FEDERAL REPUBLIC OF NIGERIA

Engineer O.A. Ogali, General Manager 27.3.02

(3) For and on behalf of the Contractor
CHINA NATIONAL MACHINERY AND EQUIPMENT IMPORT AND EXPORT CORPORATION,
PEOPLE'S REPUBLIC OF CHINA

Li Shuzhi Esq, President

(4) For and on behalf of
BURSWOOD LTD, HONGKONG
- Project Consultant

Lim Bee Woo Esq, Managing Director

(5) Witness:

Olagunju Adesakin Esq,
His Excellency Ambassador,
Embassy of Nigeria, Beijing, China

APPENDIX CONTENT

Single Cycle Gas Turbine Power Plant – 335MW

SERIAL	PARTICULARS	PAGE
Appendix 1	Design Basis Of Single Cycle Gas Turbine Power Plant	2-2
Appendix 2	Brief Description On Single Cycle Gas Turbine Power Plant	2-4
Appendix 3	Drawings For Single Cycle Gas Turbine Power Plant	2-54
Appendix 4	Main Equipment List	2-66
Appendix 5	Main Technical And Economical Targets	2-83
Appendix 6	Schedule Of Construction For Single Cycle Gas Turbine Power Plant	2-84
Appendix 7	Payment Schedule For Single Cycle Gas Turbine Power Plant For Seller's Credit Payment Terms	2-86

Appendix 1 - Design Basis Of Single Cycle Gas Turbine Power Plant – 335MW

At lack of site, fuel, meteorological, hydrological, engineering geological and power grid information, the proposal is designed under the conditions assumed hereunder. Upon receipt of completed questionnaire, engineering geological drill surveying and soil test report and after the site visit, a final proposal and technical feasibility study will be presented

01.01 Natural gas fuel

The natural gas of the following specifications is used as the main and only fuel in the project. The gas is supplied abundantly in pipeline form to the site boundary at Employers' own expense.

content, % Vol		content, % Vol		content, % Vol	
C_1	96.226	NC_4	0.075	C_7	0.033
C_2	1.77	IC_5	0.02	CO_2	0.473
C_3	0.300	NC_5	0.016	N_2	0.967
IC_4	0.062	C_6	0.051	H_2S	0.002
L.H.V, MJ/Nm^3					33.812
incoming gas pressure, bar					40

01.02 Site meteorological condition

The meteorological conditions at the proposed site are assumed as follows:

s/no	particular	assumed condition
1	barometric pressure, mbar	1,000
2	average temperature in rain season, ℃	27
3	average temperature in dry season, ℃	35
4	relative humidity, %	48

01.03 Site land condition

The proposed power plant is assumed to locate on the site of clear, flat, solid land, there is no earthquake and swamp within the area and no cave underneath.

01.04 Foundation of building and equipment

The foundations of all equipment and buildings are based on a natural base with appropriate load bearing without further civil engineering work like piling work.

01.05 Connecting to external grid

The plant's electric power is connected to the local external power grid nearby via five 132KV x 50HZ outgoing transmission lines; connection beyond the site boundary, capacity and compatibility of grid are for Employer's risks and account.

01.06 Fresh water supply

The fresh water of sufficient quantity and of good quality is supplied from external sources to the boundary thru pipeline at Employer's cost and the cooling water is of second-through supply system. The source can be river, lake, reservoir, underground and public tap depending on cost and reliability; details of quality and quantity are to be provided to the Contractor soonest possible.

01.07 Code and standard

The equipment is fabricated, the proposed plant is designed and built and the civil engineering works are carried out fully and strictly in accordance with the following relevant ISO and other Chinese and international appropriate codes, standards unless otherwise stated by the Designer and the Contractor in writing.

no.	application	code and standard
01	gas turbine generator	ISO11086 Gas Turbine – Vocabulary; ISO3977/1 Gas Turbine – Procurement-General Introduction and Definitions; ISO2314 Gas Turbine –Acceptance Tests; PTC46 - Overall Plant Performance.
02	fuel gas/water heat exchanger	TEMA Class C requirements and/or ASME Section VIII, Division 1.
03	electrical and power substation	IEEE-Institute of Electrical and Electronics Engineers; IEC-International Electromechanical Commission; GB (The national standards of China).
04	civil engineering-general	DL5000-2000:Technical Code for Designing Fossil Fuel Power Plants. DL5022-93:Technical stipulation for the design of civil structure of thermal power plant.
05	fire protection	GB50229-96: Code for fire-protection design power plant and substation.
06		GBJ 16-87: Code for fire-protection architectural design.
07	finishing	DL5029-94: Standard for designing of architecture finishing of fossil fuel power plants.
08	dynamic machine foundation	GB50040-96: Code for design of dynamic machine foundation.
09	construction and acceptance	GB50205-95: Code for construction and acceptance of steel structure engineering.
10	fire fighting	GB50229-96 Code for fire-protection design power plant and substation; GBJ 16-87Code for fire-protection design building; GB50219-95 Code of design for water spray extinguishing systems; GB50193-93 Code of design for carbon dioxide fire extinguishing systems; GBJ 140-90 Code of design for mobile extinguishers; DL5027-93 Typical regulation for fire-protection electrical equipment; GB50116-98 Code for design of automatic fire alarm system.
11	ventilation and environment protection	GBJ 19—87 Code for Design of Heating, Ventilation and Air Conditioning; GB50229-96 Code for Fire-Protection Design Power Plant and Substation; DL/T5035-94Technical Specification for Designing Fossil Fuel Power Plants; DL 5000—2000 Technical Code for Designing Fossil Fuel Power Plants; GB 50243—97 Code for Construction and Acceptance of Ventilation and Air Conditioning Works; GBJ 66—84 Code for Construction and Acceptance of Refrigerating Facilities Engineering; GBJ 16—87Code for Fire-Protection Design Building; DL5053—1996 Design Code of Labour Safety and Industrial Hygiene for Fossil Fuel Power Plants; GB50155—92 Terminology of Heating, Ventilation and Air Conditioning; GBJ87—15 Code for Noise Control Design of Industry and Corporation; GB4280—84 Exhaust Standard of Industry Pollutant.

Appendix 2 – Brief Description On
Single Cycle Gas Turbine Power Plant – 335MW

CONTENT

serial	description	page
02.00	general	2-5
03.00	mechanical & mechanical system	2-8
04.00	electrical & power substation	2-21
05.00	instrumentation & control	2-28
06.00	civil engineering works	2-29
07.00	fresh water supply	2-33
08.00	water treatment	2-37
09.00	fire fighting	2-41
10.00	ventilation & air conditioning	2-45
11.00	inplant telecommunication	2-49
12.00	proposed works & supply scope	2-51

please note that the proposal together with its technical data, drawings remain on Contractors' property and that Buyers, Owners, Employers and their agents, employees shall not disclose them to any third party without the Contractors' consent in writing.
In event of discrepancies of description of the structure and the specification of the equipment and materials stated in the Brief Description and in the Main Equipment List, those described in the Main Equipment List shall be deemed as the latest and final.

2.00 GENERAL

02.01 Proposed plant performance (drawing AF200127C-Z-01)

At lack of further information, the proposed plant is designed under the following conditions and for the following performance under ISO conditions subject to final revision. The selection of configuration of Work TPP335 is subject to gas turbine production schedule and its delivery at the Contractor's option.

no.	performance particular	work TPP335
01	gas turbine & generator design and model	GE, model PG6581B
02	gas turbine total rated output MW, 8 sets each 42.10MW	336.8
03	contracted output, MW	335
04	own power consumption, MW	3.4
05	power output contracted/ available for external grid, MW	331.60 / 333.4
06	substation installed capacity, A x kV x Hz	2,000x132x50
07	production day/annum after annual, overhaul service	327
08	overall natural gas consumption, Nm^3/second	30.96
09	heat efficiency, gross/net rate, %	31.5 /31.2
10	land dimension, hectare	11.075
11	fresh water consumption including recycle, m^3/hour	64
12	stack (chimney) height, meter	20
13	heaviest single shipping package, ton	100
14	local + expatiate production employee for 3 shifts, number	25 + 55

02.02 Generating and supply of electricity of proposal TPP335

The generating and supply of electric power in the proposed plant is designed as follows in brief. The proposed output is based on ISO conditions and for specified site where conditions vary, the actual output would not remain the same naturally and definitely. The Contractor is just liable for the specified contracted output.

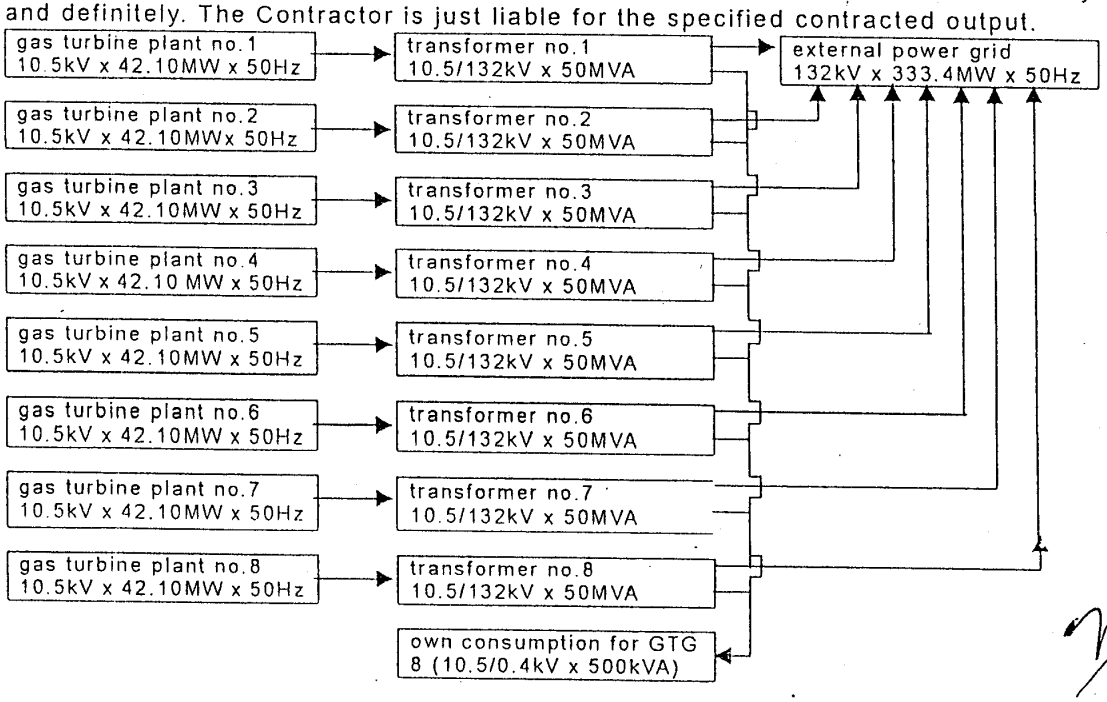

02.03 Works and supply of proposal

In general, the proposal is designed to cover the following works and supply unless otherwise specified in writing. Please refer to Works & Supply Scope for details.

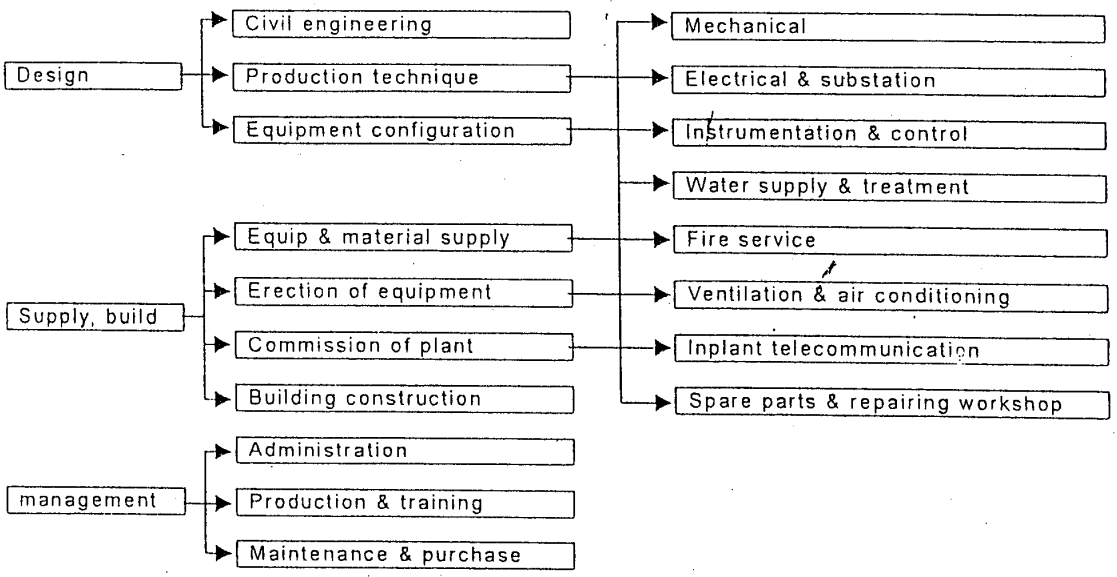

02.04 Language and measuring

Communication is in English and metric measuring is adopted for the project unless otherwise stated in writing by Contractor.

02.05 Service of equipment

The annual service of 20 days and overhaul service of 90 days every four years are scheduled in the proposal. The casual breakdown during the operation course if any is repaired to good order promptly and thoroughly without being accumulated.

02.06 Environment protection

Basically the power plant using natural gas as its fuel is clean, harmless, odourless and dust free. The cooling water is recycled and its minor free discharge is absolutely clean and harmless. The noise at one meter away from the turbine machines is ≤ 96db.The flame smoke from the chimney is then the only substance that will probably cause pollution. However, with the gas turbine's fuel clean nature and the fine design, structure of the stack (chimney), the discharge of flame smoke is under strict control and its emission density much is far below the limit of both Chinese and international environment protection regulations.

02.07 Industrial training

A team of 20 young men / women selected by the Employer will be trained in equipment manufactories and in power plants in China for a period of 3 months at free cost (except their return air tickets) immediately on receipt of down payment. The personnel trained in China will commit themselves during the installation course which would impress them physically and practically.

[redacted]

02.08 Spare parts recommended

One set of easy weardown spare parts for two (2) years consumption under normal operation is recommended and provided as per Contractor's experience in China and the cost is included. Under no circumstances shall the Contractor be liable for any shortage throughout the production course.

02.09 Contractor's tools materials surplus and equipment

Any tools, materials surplus and equipment supplied by Contractor for the construction, erection and test running and for Contractor and/or their staffs' private use shall remain on Contractor's property and Employer shall allow Contractor to remove them from the site at any time at Contractor's discretion.

02.10 Repairing workshop

Unless otherwise requested by the Employer and additional cost is quoted or one set of standard machine tool shop equipment and one set equipment maintenance hand tools for the power plant production and maintenance work as per Contractor's experience in China are provided.

02.11 Expatriate management

In consideration of the size of the proposed plant under credit terms, it is proposed that a team of well-experienced Chinese technicians and engineers is employed to run the place after commission under a separate management contract. It is an assurance of reliability of power supply and their costs are affordable. Should a team of expatriates is employed from the Contractor to run the place after commission, one set of home appliance and facilities is provided at extra cost if required.
Low density living quarter with complete social facilities and functions adjoining to the proposed site is built for the local and expatriate management staffs.

02.12 Delivery, taking over and production

The power plant is configured with several independent units which are delivered, erected and commissioned in several different stages instead of a final taking over at once, therefore the generation could be commenced at earlier stage immediately when the partial gas turbine unit is commissioned – partial delivery and partial generation.

02.13 Unloading and road haulage at destination

It is proposed that the Employer is responsible for the unloading, custom clearance and discharge port – site road haulage, necessary arrangement is to be made duly and promptly or delay in completion of the Contractor's works would occur by the Employer. Some machines are so heavy and huge that professional transportation company with special heavy duty crane, trailer equipment and with heavy equipment unloading, haulage experience is needed imperatively.

03.00 MECHANICAL & MECHANICAL SYSTEM

The mechanical section of the proposed plant only contains gas turbine with a series of auxiliary and ancillary, details of which are stated in equipment list while the major mechanical equipment and system are briefed hereunder.
The plant is proposed to configure with eight (8) independent gas turbine generating sets. The single shaft gas turbine is installed to generate power independently in case of breakdown or service.

03.01 Gas turbine (GT and GTG)

Eight (8) complete sets of GE model PG6581B heavy duty, single shaft, gas turbine are selected. The GT plant is equipped with a complete set of auxiliaries and ancillaries as stated in the equipment list. The major specifications of each set under ISO conditions are briefed as follows:

No.	particular	model PG6581B
01	**Gas turbine (GT):**	
02	Type	single-shaft, heavy duty
03	Design and model	GE, model PG6581B
04	Quantity, set	8
05	Rated output, (MW) as per ISO	42.10
06	Shaft speed, (r/min)	5,163
07	Heat rate, (kJ/kWh)	11,220
08	Natural gas consumption, (Nm^3/second)	3.87
09	Inlet temperature of turbine (°C)	1,140
10	Exhaust temperature, (°C)	548
11	Exhaust flow, (kg/h)	529,200
12	**Gas turbine generator (GTG):**	
13	Quantity, set	8
14	Rated output/set, ISO conditions, kW x kv x hz	42,100 x 10.5 x 50
15	Phase number	3
16	Power factor, %	80
17	Current A	2,836
18	Excitation power kVA × volt V × current A	200 x 360 x 625
19	Speed rpm	3,000
20	Excitation system	brushless
21	Neutral earthing	resistor
22	Dimension L×W×H, (m)	11.6434 × 3.2004 × 3.81
23	Weight, (ton)	100
24	Code and standard applicable: ISO11086 Gas Turbine-Vocabulary; ISO3977/1-Gas Turbine-Procurement-General Introduction and Definitions; ISO2314-Gas Turbine-Acceptance Tests and PTC46-Overall Plant Performance	

The gas turbine consists of the following main components:

- Air cooled generator
- Generator circuit breaker
- Isolated phase bus ducts.
- Generator transformer
- Tariff metering (main and check) for generator and generator auxiliaries
- Gas fuel system
- Nitrogen purging systems.
- Lubricating oil system including plate type lubricating oil coolers, purifiers, tank and demister
- Turning gear
- Starting device with all auxiliaries and controls

- Batteries and battery chargers
- Turbine generator controls or local and remote operation
- Equivalent vibration detection and protection system
- Air inlet housing, self-cleaning filtration and inlet ductwork
- Exhaust ductwork
- Bypass stack
- Bypass damper including isolation plate
- Inlet and exhaust noise attenuation, expansion pieces
- Building and enclosure ventilation
- Fire protection and detection
- Compressor off/online washing system
- Electrical systems
- Unit and station transformers
- Thermal insulation and acoustic treatment

03.01.01 Technical Specification for PG6581B Gas Turbine Generating Set

The gas turbine generating set is produced in China under Manufacture Associate Agreement with GE Company of USA. The compressor, turbine rotor, stator vane of compressor, turbine nozzles, combustion system and Speedtronic Mark V control panel as well as drawings are provided by GE. The generator is licensed from Brush Electrical Machines Ltd. of UK.

PG6581B gas turbine generating set is a package unit and can be installed for outdoor operation. It is composed of four blocks i.e. the gas turbine and accessories compartment, control compartment, load gearbox enclosure and generator compartment.

The control panel of gas turbine, control panel and protection panels of generator, motor control centre (M.C.C.) are located in the control compartment. Neutral point and outgoing leads cabinet are situated at each sides of the generator compartment. The whole unit is furnished with necessary ventilation, lighting and fire-fighting system. There are air conditioners in the control compartment.

03.01.02 Technical Specification

Base load (ISO condition) (guaranteed value subject contract condition)

particulars	unit	distillate oil	natural gas
Output	kW	41,160	42,100
Heat rate	kJ/kW.h	11,320	11,220
Inlet temp. of turbine	℃	1140	1140
Exhaust temperature	℃	548	548
Exhaust gas flow	$\times 10^3$kg/h	529.2	529.2

Note: above performance is measured at generator terminals and includes allowances for the effects on shaft driven auxiliaries, and 2.55in H_2O (6.48mbar) inlet and 2.52in H_2O (6.4mbar) exhaust pressure drops and a NON DLN combustors.

03.01.03 Performance correction on the non-ISO conditions

Correction curve: (see the attachment)

1. Altitude correction on curve 416HA662 Rev.A
2. Ambient temperature correction on curve 544HA875-2Rev.0
3. Effect of modulating IGV's on exhaust temperature and flow on curve 544875-3 Rev.0
4. Humidity correction on curve 498HA697 Rev.B

Effect on pressure drop:

1. Air inlet pressure loss increase every 996 Pa, results an output decrease of 1.50%, and a heat rate increase of 0.50%, exhaust temperature increase 1.2℃.

2. Exhaust pressure loss increase every 996Pa, results an output decrease of 0.50%, and a heat rate increase of 0.50%, exhaust temperature increase of 1.2 ℃.
NO_x emission: 168ppmVD for natural gas, 327ppmVD for distillate oil.
Noise: average 93dB(A) at 1m from each machine.

03.01.04 Scope of Supply for PG6581B Gas Turbine Generating Set

Gas Turbine Compartments: Single shaft gas turbine fitted on a common base with its accessories is built for weatherproof conditions, the enclosure is provided with thermal and acoustical insulation, heating and ventilation.

- Gas turbine.
- Air inlet plenum and ducting of compressor.
- Inlet guide vane (IGV).
- 17 stages single shaft axial compressor.
- 10 can-type combustors and ignitor, flame detector etc.
- 3 stages axial turbine: There are borescope inspection holes on the casings for maintenance. There is anti-corrosion coating on first stage bucket.
- Exhaust plenum and ducting.
- Turbine supports.
- Load coupling.

Accessory equipment

- Multi-shaft accessory gear and over-speed bolts.
- Auxiliary coupling.
- Lube oil system: Main lube oil pump, accessory lube oil pump and emergency pump, duplex filters, duplex oil coolers, safety valves, pressure regulating valves, oil level indicators, oil heaters, temperature switches, pressure switches and piping.
- Cooling and sealing system: Two cooler fans of turbine, two bleeding valves of compressor and solenoid valves, limit switches, pneumatic isolating valve, orifice and piping.
- Hydraulic oil system: Main hydraulic oil pump, accessory hydraulic oil pump, safety valves, change-over duplex filter and valves, manifold, pressure switches and piping.
- Trip oil system: Emergency trip oil device, pressure switches, fuel oil stop valve, orifice and piping.
- Cooling water system: Temperature control valve of lube oil manifold, orifice and piping.
- Starting means: Starting motor or diesel engine, hydraulic torque converter, starting clutch, control solenoid valves, safety valves, pressure switches.
- Hydraulic turning gear system: Turning gear device, oil pump (DC), control unit, servo-operated cylinder of clutch, oil filter, safety valves, limit switches and piping.
- Fuel gas system: Gas filter, speed/ratio valve and control valve, servo valve, starting-failure draining valve, pressure switch, limit switch and piping.
- Ventilation in enclosure: Ventilation fans.
- IGV system: IGV actuating device, IGV servo-unit, hydraulic control modules, accumulator, transmitter for travel, solenoid valve and piping.
- Measuring system including protection system for over-speed, over-temperature, vibration, flame-off, lube oil pressure, lube oil temperature and measuring elements and local instrumentation such as speed sensor, various thermocouples, vibration sensor, flame detectors, pressure switches, temperature switches.
- Lighting system (AC, DC) in gas turbine enclosure.
- Ductwork for internal wiring of system.
- Water washing system for compressor.
- CO_2 fire-fighting system and flame detection system.
- Mist and lube oil separator system.

Gas turbine base

- The gas turbine and accessories are mounted on the same base. The lube oil tank and #1, #2 junction boxes are also mounted on it.

Enclosure

- With ventilation, lighting and fire-fighting devices, the enclosure contain the GT compartment and accessory compartment.

Walk-way on the unit

- Walk-way grid, railing, staircase etc.
- Control Compartment: The main control panel of the gas turbine generating set are contained in the cabinet. It is air-conditioned and well illuminated. The cabinet is set on its own base and enclosure.
- GT control panel (SPEEDTRONIC MARK V)
- Generator control panel.
- Generator protection panel.
- M.C.C.
- Two sets of air conditioners located at wall.
- Cabling and tubing for air conditioning, lighting in the cabinet.
- Base of the cabinet.
- Enclosure of the cabinet.
- Load Gearbox Compartment: Load gearbox, gearbox base, enclosure with weatherproof, sound insulation, ventilation, lighting and fire-fighting devices.
- Generator compartment.
- Generator (type: QFR-38-2)
- AC brushless exciter.
- Permanent magnet pilot exciter.
- Generator outgoing lead booth: Including three phases arrestor, discharge counter, protection capacitor and outgoing terminals.
- Generator neutral point booth: Including CT, arrestor, etc.
- Modular Automatic Voltage Regulator (MAVR).
- Air cooler of generator.
- Enclosure of generator (with weatherproof, sound insulation, lighting and fire-fighting devices).

Air inlet system

- Self-cleaning air filter and control system.
- Air inlet ducting, silencer and support.
- Air process system (provide for purging of air filter after treatment of compressing air from compressor) and standby air purging source.

Exhaust system

- Exhaust ducting and exhaust silencer and expansion joint.
- Stack (level of outlet is 20m above base).

Fire - fighting Device

- CO_2 cabinet, control and alarming device and piping.

Water washing skid (one unit is provided for one power plant)

- Special tools (one set is provided for one power plant. If there are over three GT Gen sets, additional one set is provided.)
- Tool for liner.
- Fixture for fuel nozzles.
- guide stems (for dismantling and assembling of bearing cover, compressor and turbine casing)
- Alignment tools.
- Dismantling and assembling tools for No.2 bearing and load Coupling.
- GT Rotor lifting tool.
- Generator rotor withdrawing tool.
- Disassembling and assembling tools for retaining ring.

- Diode fixture tool (belong to exciter).

Wedge plates and anchor bolts

- All special packing plates for the unit erection, regulating shims and anchor bolts (including ordinary levelling plates and the embedded parts).

Spare parts provided with GT Gen set

- They are provided according to "Scope of Supply of PG6581B Gas Turbine Generating Set".

Five copies of drawings provided with the GT Gen set

- Installation drawings.
- Outline of foundation; Arrangement of anchor bolts.
- Interface diagram of end user's piping.
- Wiring of gas turbine.
- Clearance of gas turbine.
- Arrangement of gas turbine generating set.
- Centre of weight for gas turbine; Centre of weight for gas turbine generating set.
- Alignment.
- Schematic piping system.
- One-line diagram of generator.
- Drawings of spare parts.

Five copies of documents provided with the GT Gen set

- Operation and maintenance manual including curves of output and heat rate at different environmental condition.
- Installation and alignment instruction.
- Control specification and manual of turbine control panel.
- Report of test-run in the factory; Product certificate.
- Other documents which the end user needs.

[illegible].02 Cooling water system (drawing No: AF200127C-J-02)

Design and supply scope

The cooling system includes the following major components:

The pipes, valves, accessories, etc on the system from the outlet pipe of the circulating water pump to the GT area are included.

Function and parameter –

The cooling water system provides cooling water flow to GT lube oil cooler, GT generator air cooler and etc.

[illegible].03 Compressed air system (drawing No: AF200127C-J-03)

Design and supply scope

The compressed air system consists of the following major components:

(1) Two 100% capacity air compressors,
(2) One 20m^3 common air receiver,
(3) Two refrigerant air dryer with two prefilters and two afterfilters,
(4) One 2m^3 air receiver used in water treatment area,
(5) One automatic shut-off valve in service air piping,

Function and parameters –

The instrument and service air system (ISAS) supplies cooled and compressed air to the plant air users and instruments in the cogeneration plant as instrument and service air. The ISAS supplies compressed air from the discharge of the air compressors to the service air users through a self-

contained backpressure control valve, and to the air prefilters, dryers and afterfilters where particles and moisture are removed from the air. After the air afterfilters the air is conveyed to the common air receiver. The air receiver dampens system pressure variations due to load swings. The compressed air from the air receiver is supplied to miscellaneous control valves and instrumentation users.

Two 100% capacity air compressors are of screw air compressors, non-lube cylinder, air cooled type and provide oil-free air, each rated at capacity of 20 Nm^3/min and 0.75 MPa discharge pressure. The two compressors are parallel with one in operation and the other standby. The compressor in service runs alternately on a lead/lag controls with the standby to equalize wear.

C.04 Fuel gas supply system (drawing No: AF200127C-J-01)

Design and supply scope

The fuel gas system includes the following major components:

(1) Two 100% capacity fuel gas station scrubbers.
(2) Two 50% fuel gas/water heat exchangers.
(3) One pressure regulating station including two 50% pressure-reducing valves and a bypass isolation valve.
(4) A fuel gas flow check metering station includes two 50% flow meter and a bypass line with isolation valve.
(5) Two 50% fuel gas heating hot water system
(6) Two individual unit scrubbers each.
(7) One cold gas venting system.
(8) One common drain tank.
(9) All valves, piping, and instrumentation & controls required for a complete system.

System description –

The fuel gas system (FGS) provides the transferring, scrubbing, heating, check metering and pressure reducing of fuel gas to be used in the combined cycle plant as the primary fuel of four gas turbine generators. The Employers lead gas from the pipeline, then through a fuel gas receiving station, two individual gas scrubbers, and gas flow check metering system prior to being introduced to the gas turbine fuel gas forwarding skids.

Fuel gas station scrubber

Two 100% capacity station scrubbers, each with an inlet fast-closed valves is considered. The station scrubbers are used to remove solid and liquid particles from the fuel gas stream leading to the plant.

The station scrubber is a vertical, dry, filter-separator type and is designed and constructed in accordance with requirements of ASME B&PV Code. The station scrubber is completed with all necessary Instrumentation and controls.

The rated efficiency of the station scrubber at the specified conditions for removing solid particles and entrained liquid droplets from the gas stream are as follows:

(1) 8 micron particle & above 99.9% removal
(2) 6~8 micron: 99.0%
(3) 4~6 micron: 90.0%
(4) 2~4 micron: 85.0%
(5) And any remaining liquid particles will not exceed 0.25% by weight.

The solid and liquid particles separated from the station scrubber drains to the drain header, then leads to the common drain tank.

Fuel gas/water heat exchangers

The 50% fuel gas/water heat exchangers are used to heat the fuel gas supplied to the gas turbines.

Gas/water heat exchangers are supplied to heat the natural gas temperature according to the requirements of the gas turbine.

The fuel gas/water heat exchangers are designed and fabricated in accordance with TEMA Class C requirements and/or ASME Section VIII, Division 1.

Fuel gas pressure regulating station

The pressure regulating station includes two 50% pressure-reducing valves, and a bypass isolation valve. The regulating station is used to reduce the gas pressure from delivery pressure of 40 bar to the gas turbine inlet pressure. The reducing valves are closed or open by DCS in accordance with the flow rate in the FGS.

Fuel gas flow check metering station

The check metering station provides the means to measure the volume flow rate of the fuel gas. The check metering station includes two 50% flow meter and a bypass line for maintenance with stop valve. When the gas flow is lower (during startup, shutdown or reduced load operation), DCS will shutoff one 50% meter line through closing the shutoff valve only with one 50% metering line in operation for more accurate metering.

Individual unit scrubber

Two individual unit scrubbers are equipped each for one gas turbine. The scrubbers are used to remove solid and liquid particles and to ensure that the gas supplied to the gas turbine is dry and pure.

The rated efficiency of the unit scrubbers are as same as the station scrubbers.

The solid and liquid particles removed from the unit scrubber are drained to the drain header, then led to the common drain tank.

Cold gas venting subsystem

The cold gas venting system is used to discharge the cold gas in main gas line before starting the FGS after long-term shutdown of the FGS. The venting system includes three stop valves each for a self-contained pressure-reducing valve. The gas is fired and vent to atmosphere.

Fuel gas heating hot water system

Two 50% fuel gas heating hot water systems are designed to increase the fuel gas temperature to meet the gas turbine inlet temperature requirement. A piping leads from the main fuel gas piping to the system.

03.05 GT plant layout (drawing No: AF200127C-J-04)
The detailed arrangement layout is shown in the relevant drawing.

03.05.01 Bypass stack
One bypass stack is equipped for each of the gas turbine. The span from the centre of gas turbine combustor to the centre of the bypass stack is 13.7 meter.

03.05.02 Gas turbine plant –
Eight (8) sets of gas turbine/generator are arranged in parallel. The span of two gas turbine central line is 35 meter. They are installed outdoor without covering roof.

03.05.03 Measure of outdoor protection of the gas turbine –
The gas turbines are designed to resist rain, windbreak and corrosion by salt fog. In addition, the corrosion resistant paint is used for auxiliary equipment and piping.

03.05.04 Major layout figures -

no	particular, size in meter	work TPP335
01	Gas turbine installed for the proposed plant	PG 6581B
02	Distance between two gas turbine	35
03	Distance from combustor centre to bypass stack centre	13.7

ATTACHMENT

GENERAL ELECTRIC MODEL PG6581B GAS TURBINE

Estimated Perfomance - Configuration : STANDARD

Compressor Inlet Conditions 59F (15° C), 60% Relative Humidity

Fuel		NATURAL GAS
Design Output	kW	42 100
Design Heat Rate (LVH)	kJ/kWh	11 220
Design Heat Cons (LVH)*10	kJ/h	472
Design Exhaust Flow * 10^3	kg/s	147
Exhaust Temperature	°C	548
Mode		BASE LOAD

Notes

1. Altitude correction on curve 416HA562 Rev A
2. Ambient temperature correction on curve 544HA875-2 Rev 0
3. Effect on modulating IGV's on exhaust temperature and flow on curve 544HA875-3 Rev 0
4. Humidity effects on curve 496HA697 Rev B - all performance calculated with a constant specific humidity of .0064 or less so as not to exceed 100% relative humidity.
5. Plant Performances is measured at the generator terminals and includes allowances for the effects of excitation power, shaft driven auxiliaries and2.55 in H20 inlet and 2.52 in H20 exhaust pressure drops

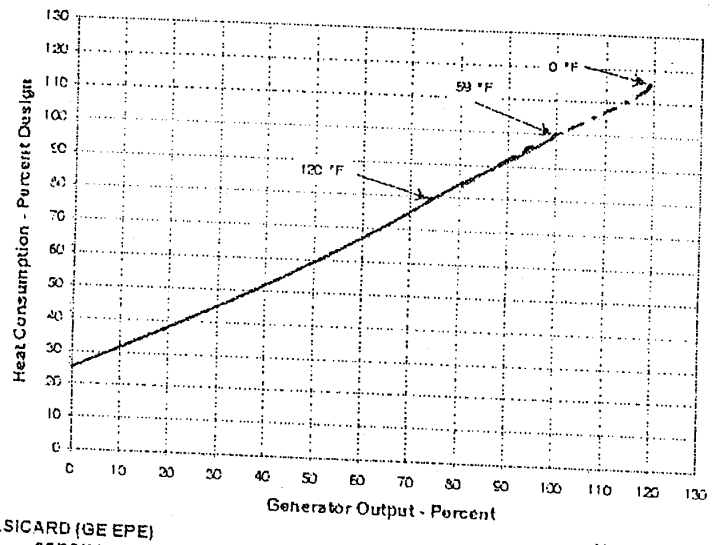

V.SICARD (GE EPE)
05/09/01

Number 544HA875-1
Revision 0

GENERAL ELECTRIC MODEL PG6581B GAS TURBINE
Effect of compressor Inlet Temperature on
Output,Heat Rate, Heat Consumption, Exhaust Flow
And Exhaust Temperature at BASE LOAD

Fuel NATURAL GAS @ 80deg F
Combustor STANDARD

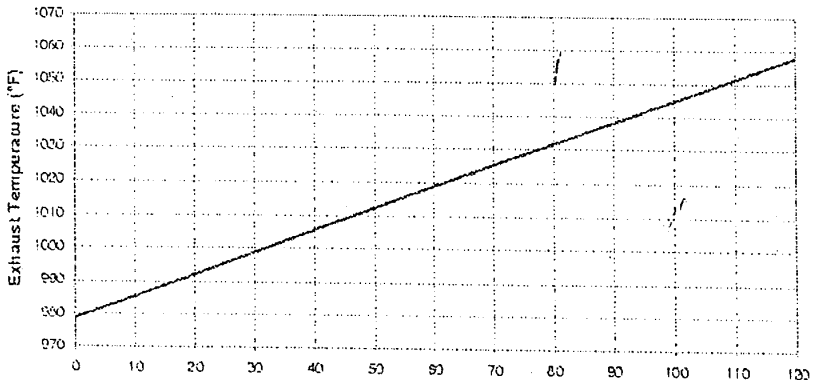

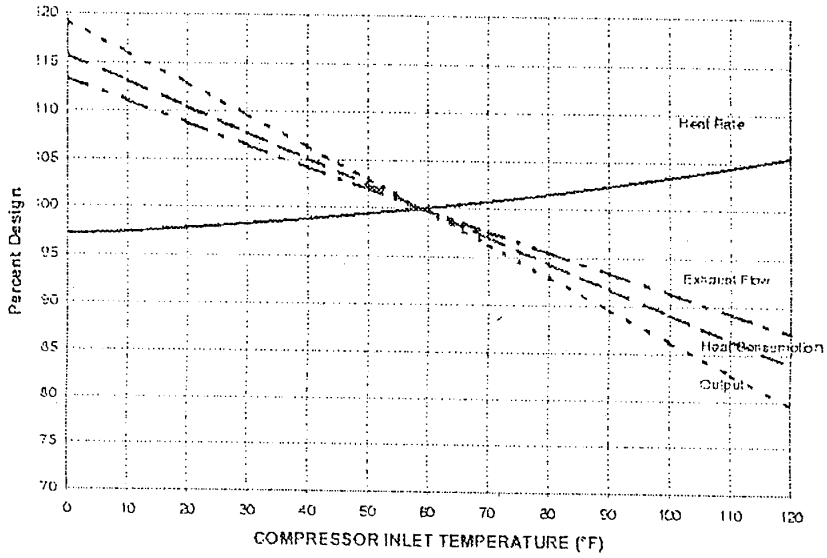

V.SICARD (GE EPE)
05/09/01

Number 544HA875-2
Revision 0

GENERAL ELECTRIC MODEL PG6581B GAS TURBINE
Effect of Inlet Guide Vane on Exhaust Flow and Temperature
As a function of Output and Compressor Inlet Temperature

Fuel NATURAL GAS @ 80deg F
Combustor STANDARD

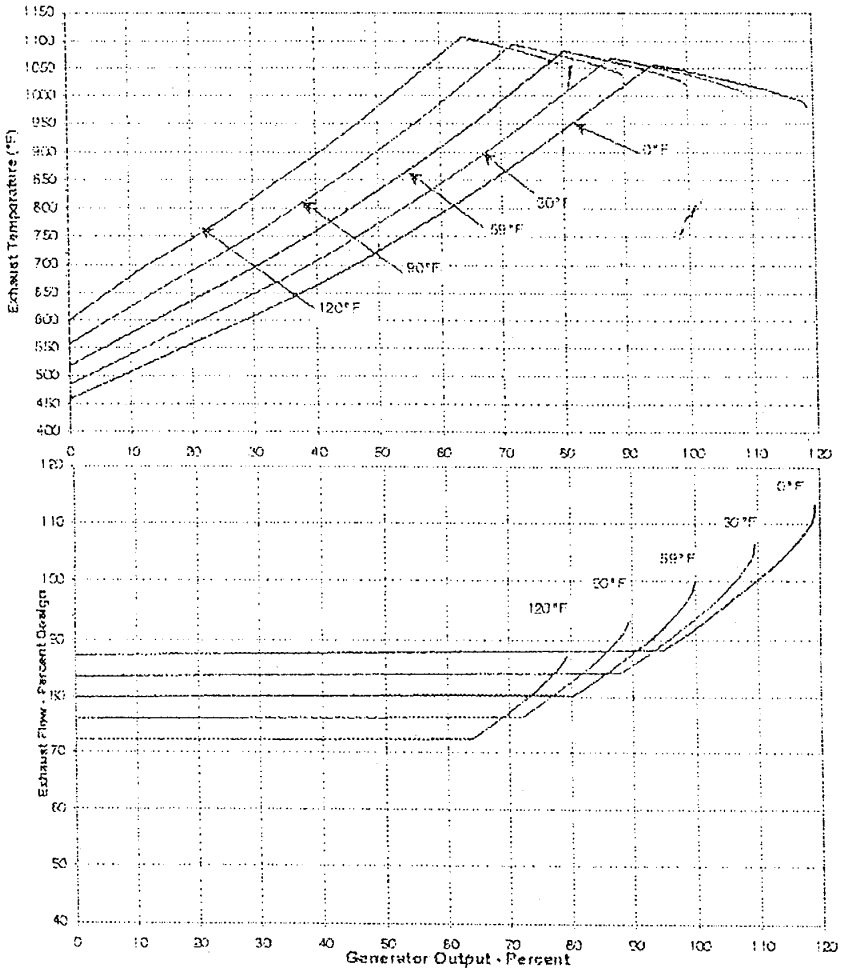

V.SICARD (GE EPE)
05/09/01

Number 544HA875-3
Revision 0

GENERAL ELECTRIC MS6001, MS7001 AND MS9001 GAS TURBINES

CORRECTIONS TO OUTPUT AND HEAT RATE
FOR NON-ISO SPECIFIC HUMIDITY CONDITIONS
For operation at base load on exhaust
temperature control curve

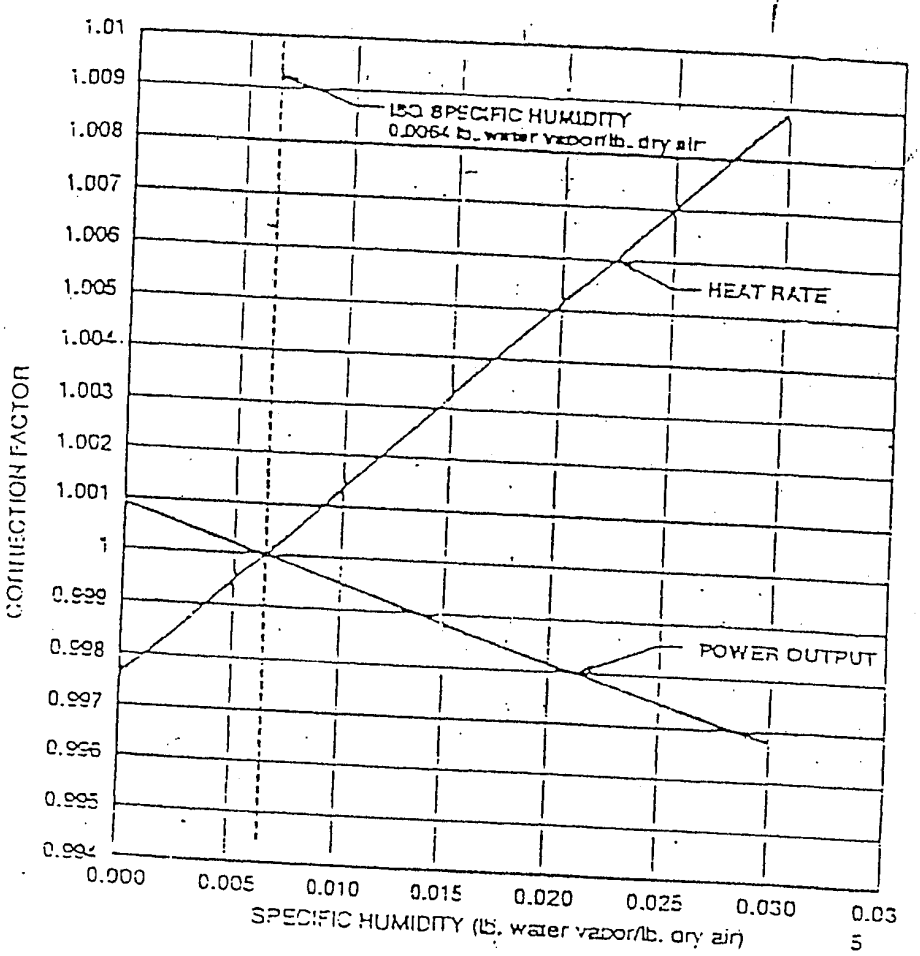

10/10/89
DA JAQUEWAY

296HA697
REV 5

GENERAL ELECTRIC GAS TURBINE
ALTITUDE CORRECTION FACTOR

ALTITUDE VS ATMOSPHERIC PRESSURE
AND
ALTITUDE VS CORRECTION FACTOR
FOR GAS TURBINE OUTPUT AND FUEL CONSUMPTION

NOTES:
1. Heat Rate and Thermal Efficiency are not affected by altitude.
2. Correction Factor = P(atm)/14.7

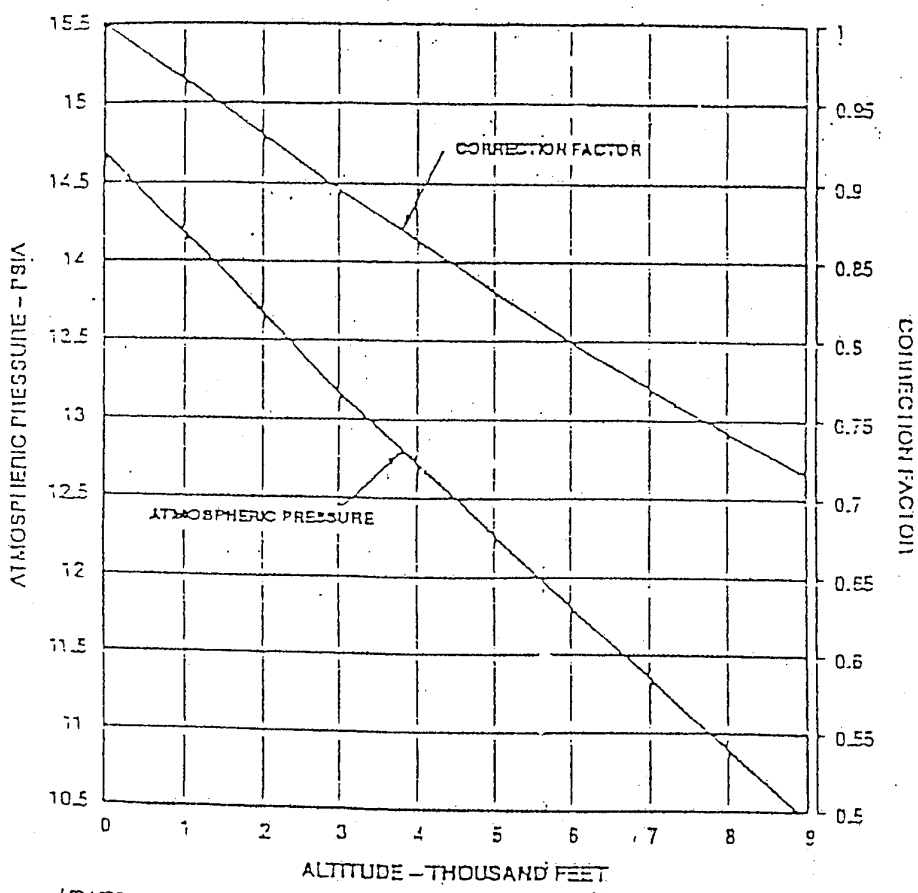

4/24/90
F.L. BROOKS

416HA662
REV A

Reference GTS-11D page .
Estimating Gas Turbine Performance

2.

04.00 ELECTRICAL & POWER SUBSTATION

04.01 General

The equipment and material are stated in the equipment list attached herewith.
At lack of the supporting data and information from the Employers, the following assumption and criteria are adopted for the design of the proposal.

no	assumption and criteria
01	short-circuit current of 132 kV bus should not be more than 40kA (r.m.s).
02	altitude of site should not be more than 1,000 meter
03	maximum ambient temperature should not be more than 50 ^{o}C
04	transmission line capacity should be based on "N-1" principle - the overall capacity of the plant could be transmitted in the case of one of transmission lines out of order.
05	generator outlet circuit: 50 kA (r.m.s.)
06	6.3kV busbar: 25 kA (r.m.s.)
07	codes and standards: IEEE-Institute of Electrical and Electronics Engineers; IEC-International Electromechanical Commission; GB (national standards of China)

04.02 Key electrical connection (drawing AF200127C-D-01)

The proposed IPP contains **eight independent** GTG each 42.10MW under ISO conditions, they are connected to **eight** 132/10.5KV x 50MVA (total 400MVA) **independent** step-up transformers via generator circuit breaker (GCB). Eight 10.5/0.4KV x 500kVA LV auxiliary transformers for Gas Turbine unit are connected to GTG step-up transformers low voltage side. The generators, step-up transformers, GCB and LV auxiliary transformer are connected with cables. Through step-up transformer, the electric power is delivered to 132kV outdoor switchgear which is air-insulated type. 132kV bus is of double-bus with bus-coupler , bus section breaker for one of bus is furnished to improve reliability . There are two start-up & standby transformers fed from 132kV bus for plant start-up and standby power source. The 132kV power system is solidly grounded. The generator neutral is ungrounded. There is access for five 132kV transmission lines (supply and erection costs of these outgoing cable from stepup transformer to adjoining external grid are for the Employer's account).

04.03 Auxiliary power system (drawing AF200127C-D-01)

The auxiliary power system consists of 6.3kV, 3kV and 400/230V distribution system.
Two 6.3kV spare bus with bus tie fed by start-up/standby transformer are furnished for start-up transformer, common/standby transformer, and as start-up and standby power source of future Steam Gas Turbine unit.
Two 3kV bus fed by start-up transformer, are furnished to feed 3kV start-up motors for GTG.
400/230V distribution system is of PC-MCC distribution system. There are one LV auxiliary transformer and 400/230V PC bus for each GTG. PC bus is arranged in the control building for the feeding of motors of 75kW and larger, MCC bus is arranged near the site for the feeding of motors of less than 75kW.
Two LV common & standby transformer fed by 6.3kV spare bus is furnished as common auxiliary system power source and standby power source for LV auxiliary transformers.
The 6.3kV distribution system is ungrounded while the 400V distribution system is solidly grounded in the auxiliary transformer neutral.
One emergency diesel-generator set is provided for emergency shutdown of gas turbines. In the case of failure power of plant, the set will start automatically to feed shutdown loads of gas turbines. The emergency diesel-generator set is **not** sized for black-start capability.

[redacted]

04.04 Arrangement of electrical equipment (drawing AF200127C-D-02)

According to the requirements of electrical connection and the layout of the plant, main transformers are installed near generator with its HV terminal connected to 132kV switchgear through overhead line or cables.

For the convenience of connection between Gas Turbine Generators and main transformers, the generator outlet switch cell is located near main transformers, connected to main transformer by none-Insulated bus bridge. The generator circuit breaker and unit aux. transformer feeder circuit equipment are furnished inside the switch cell.

The 132kV switchyard is in the west of gas turbine generator or future steam turbine plant. The 132kV switchgear is installed outdoor, double-rows arrangement, located opposite the generators. There are 20 bays for this phase and 2 bays spare available. The width of each bay is 12 meters.

The 6.3kV ,3 kV and 400/230V common PC distribution room is located in the central control building 0.0 meter elevation. The 400/230V PC distribution panel for GTG is in the switch cell.

04.05 Main configuration

The following major equipment is selected for the proposed plant.

04.05.01 GTG and STG stepup main transformer

The main transformer is 3-phase, 2 windings, forced oil and forced air cooling (OFAF) type with off-load tap changer.

no	description	specification
01	**Main transformer for GTG:**	
02	Quantity, set	8
03	Rated capacity, MVA	50
04	Type	OFAF outdoor
05	Rated voltage ratio, kV	132±2X2.5%/10.5
06	Rated impedance voltage, %	10.5
07	Frequency Hz x phase	50 x 3
08	Connection HV/LV/Vector group	Y/ Δ / YN, d11
09	Transformer oil no. as per GB standard	#25
10	Site atomsphere maximum temperature, °C	40

The stepup transformers are fabricated to the following insulation class:

transformer type	SIL (1 min r.m.s.) kV		BIL for winding (peak) kV	
	HV winding	LV winding	HV winding	LV winding
GTG transformer	230	35	550	75

04.05.02 Circuit breaker

The 132kV circuit breaker and generator circuit breaker (GCB) of the following specifications are selected and fabricated for the proposed plant.

no	description	specification
01	**132kV circuit breaker**	
02	Quantity, set	18
03	Type	SF6 live-tank
04	Rated max voltage, kV	145
05	Rated current, A	2,500
06	Rated breaking current, kA	40 (r.m.s.)
07	Rated short time withstand current, kA (3S)	40
08	Rated peak withstand current, kA (peak)	100
09		

10	Generator circuit breaker (GCB) for GTG	
11	Quantity, set	8
12	Type	vacuum
13	Rated max voltage, kV	12
14	Rated current, A	4,000
15	Rated breaking current, kA	50
16	Rated short time withstand current, kA (3S)	50
17	Rated peak withstand current, kA (peak)	125

The circuit breakers are fabricated to the following insulation class:

transformer type	SIL (1 min r.m.s.) kV		BIL for winding (peak) kV	
	phase to earth	cross breaker	phase to earth	cross breaker
132kV circuit breaker	275	315	650	750
Generator circuit breaker GCB	42	42	75	75

04.05.03 Lightning arrester 132kV (MOA)

It is designed and fabricated to meet different residual voltage and discharge current:

rated	residual voltage, kV	discharge current kA
120	320	10

04.05.04 Distribution panel

The draw-out type distribution panels with the following specifications are selected and fabricated for the proposed plant:

no	description	specification
01	**6.3kV distribution panel:**	
02	Rated voltage, kV	7.2
03	Rated main busbar current, A	2,000
04	Rated short time withstand current, kA (3S)	25
05	Rated peak withstand current, kA (peak)	63
06	Protection class	IP40
07		
08	**400V distribution panel:**	
09	Rated voltage, V	660
10	Rated main busbar current, A	2,000
11	Rated short time withstand current, kA (3S)	40
12	Rated peak withstand current, kA (peak)	100
13	Protection class	IP40

04.05.05 Disconnector

The plant's disconnectors are made to the following specifications

no	description	specification
	132kV disconnector	
01	Quantity, set	44
02	type	single-brekaer
03	Rated max voltage, kV	145
04	Rated current, A	1,250
05	Rated short time withstand, kA (3S)	40
06	Rated peak withstand kA (peak)	100

disconnector type	SIL (1 min r.m.s.)		BIL for winding (peak)	
	phase to earth	cross breaker	phase to earth	cross breaker
132kV disconnector	275	315	650	750

04.05.06 Emergency generating set

For emergency service, a diesel generator of the following specification is supplied and erected:

no	description	parameter	
01	Quantity, set	1	
02	rated capacity, kW	200	
03	revolution rpm	1,500	
04	voltage x hz	400 / 230 x 50	
05	power factor	cosø=0.8 (logging),	

04.06 Cabling

Cable selection –

MV cables are of copper conductors with XLPE insulation, protective sheath and PVC external jacket. LV power cables are of copper conductors with XLPE or PVC insulation, protective sheath and PVC external jacket. Control cables are of copper conductors with PVC insulation, protective sheath and PVC external jacket of flame-retardant type. All cables near hazardous area are flame-retardant type. All cables for DC battery, UPS, and fire alarm system are fire-resistant type.

Cable raceway system –

The raceway system including conduits, flexible conduit, cable tray, cable trenches are installed and furnished to meet the requirements of power plant.

Cable fire-proof design –

Fire detection and announciator are installed in cable structure at an definite interval. In addition, following measures are adopted at necessary points in cable raceway as follows:

- Fire protective wall are furnished at egress and branch of the cable raceway.
- Hole for cable access under panel are sealed by fire-withstand material.
- Fire-resistance wall are installed in the cable trench where cables are dense.
- Fire-protect painting is provided at appropriate place on the cable.

04.07 Overvoltage protection and earthing

Overvoltage protection –

For preventing the damage from direct lightning, lightning rods are installed in the132kV outdoor switchyard and oil storage tank area .

For preventing the infraction to electrical equipment from lightning impulse, one set of zinc oxide surge arresters is furnished in front of main transformer and on each 132kV bus. The zinc oxide surge arresters are furnished to the neutral of the main transformers together with spill terminal.

Earthing –
The earthing grid for equipment and electrical system are provided to ensure safety to personnel and equipment from electrical equipment failure and lightning/static electricity. The earthing grid made of horizontal and vertical earthing device is installed in the whole plant. The earthing materials meet the requirements of corrosion-proof and short time withstand current capacity. Horizontal earthing conductor is copper strand wire of 185mm^2 section, vertical earthing rod is ø25, 2.5 meters long cooper rod.
The earthing method of the electrical supply system neutral for the power plant is as follows:

System	Earthing Method
Generator main circuit	Earthing via resistor
132kV system	Solid earth
Medium voltage	Ungrounded system
Low voltage system	Solid earth
Control system	Solid earth
AC UPS system	Solid earth
220V DC	Unearthed
Lighting, and maintenance	Solid earth

04.08 Lighting system

AC normal lighting and emergency lighting system are provided.

AC normal lighting system –

AC normal lighting system is 400/230V, neutral grounded directly, 3-phase 4-wire system. The lighting fixture voltage is 230V, it is fed from 400/230V PC or MCC nearby.

Emergency lighting system –

The emergency lighting system is of DC emergency lighting system. The DC emergency lighting system is used in the control room which is fed by DC battery system. Except DC lighting lamp in the control room that is fed directly from DC system, all the others are fed by AC lighting power system during normal plant operation and are changed to fed from DC system automatically during loss of AC lighting power. In addition, at the exit of the building where personnel is on duty, emergency lighting completed with lighting fixtures with self-contained battery and recharge control equipment is provided

04.09 DC system

DC power source is responsible to supply DC power to control and power loads under units continuous and emergency conditions. Each gas turbine generator (GTG) system is equipped with one set of DC system which is used to supply DC power source to loads of gas turbine generator system. The GTG DC system is provided by the GTG vendor.
One set of 110V DC system (station battery system) is provided for the auxiliary station power system and the 132kV switchgear. It supplies DC power source to control, indication, alarm, protection and emergency lighting loads of the above systems. The DC system consists of one battery set, one set of charger, DC distribution boards, etc. All batteries are of valve-controlled sealed lead-acid type and are sized to feed DC loads for 1-hour discharging. The size is estimated to be 300AH and the batteries are operated at full floating in normal.
The battery chargers are of high-frequency switching type.
The station battery system is located in the central control building.

04.10 AC uninterruptable power system

The uninterruptable power supply (UPS) system provides uninterrupted, transient free regulated power during all normal or abnormal plant operating conditions to specified electrical loads i.e.

computer control system and certain instrumentation and controls which require a regulated and uninterrupted AC power source.
One complete set of UPS is provided for the above loads. The capacity of the UPS is estimated to be 15kVA. The UPS consists of rectifier, inverter, static-over switch, by-pass switch, batteries and electronic elements and AC distribution panel. The input is 400V three phases and the output 230V single phase.
Under normal condition, the UPS feeds to AC critical loads via the constant voltage rectifier, inverter and static transfer switch circuit. On failure of the AC mains or rectifier, the inverter is fed by batteries. On failure of inverter or batteries, bypass power supply is also provided for standby.
The UPS equipment is located in relay room of central control building.

04.11 Control, signal and measuring system of electrical system

The control and supervision of GTG system is provided by the GTG vendor.
The gas turbine generator circuit breakers, main transformers, auxiliary transformers, LV auxiliary transformer and 132kV transmission lines and busbar equipment are monitored and controlled by Computer Control System (CCS). CCS provides data acquisition and disposal for digital, analog and pulse value, metering, display, alarm, print, recording the sequence of event, previous occurrence review and recording, control and operation, performance calculation of the above electrical equipment. All operating commands are sent out via operator workstation.
CCS also provides the function of data transmission between the power plant and the dispatching centre. Remote control, remote signalling, remote measuring and remote regulating is achieved via the remote workstation of CCS.
Local operation is provided for all electrical equipment.
The above synchronizing device panels, auxiliary relay panels, kWh metering panels, etc. are located in the electrical relay room in central control building.

04.12 System voltage

The following voltage is assumed in the design, it is subject to revision according to the building country's specifications when and where appropriate and applicable on request of the Employer.

system	rated volt.	no of phases	no of wire	voltage regulator
Generator outlet	10.5kV	3	3	±5%
132kv line	132kV	3	3	±5%
Medium voltage system	6.3kV	3	3	±5%
Black starting diesel generator	3kV	3	3	±5%
Low voltage system	400/230V	3	4	±5%
AC UPS system	220V	1	2	±1%
DC system (control)	110V	1	2	±5%
Motor voltage >200KW	6kV	3	3	±10%
Motor voltage <200KW	400V	3	3	±10%
Lighting voltage	220V	1	2	±10%
AC control system	220V	1	2	±5%
220V AC load	220V	1	2	±10%

04.13 Protective relay

The function of protective relaying is to protect the electric equipment against short circuit faults and abnormal operation and the faulted sections of the electrical equipment are isolated in the minimum time.

All protection devices are micro-processor based type.
The GTG protection is provided by GTG vendor.
The protection of main transformers, start-up/standby transformer and 132kV transmission lines and busbar equipment are furnished in electrical relay room in central control room.
Multiple protection devices are provided for the station auxiliary electrical system and the devices are mounted on the MV switchboards and LV switchboards.
Signals of main protection device of transformers and 132kV system protection are sent to CCS.

2.

05.00 INSTRUMENTATION & CONTROL (I&C)

05.01 Design and supply scope of I&C

The instrumentation and control system of this plant covers the thermal process control and monitoring of 8 sets of gas turbine unit (GT) and their auxiliary equipment and the balance of plant (BOP).

05.02 The control feature of the gas turbine generator

The control of the gas turbine generator is implemented by MARK V supplied with the gas turbine generator. MARK V consists of local panel and CRT station. The local panel is in the control cabin located at the head of the unit, and the CRT station is in the control room of 132KV switchgear control building, the communication medium is coaxial cable. Operator can supervise the main parameter of the unit, and can control the unit via the CRT station.

05.03 The control feature of the auxiliary system

05.03.01 Natural gas treatment control system and air compressor station

The natural gas treatment system is controlled by PLC. PLC cabinet is arranged at the air compressor house, and the CRT is arranged at the control room of 132KV switchgear control building, operator can supervise the main parameters of the natural gas treatment system, and can control the temperature and pressure of the natural gas, and so on.
The air compressors are controlled by the control panels supplied with the main equipment.

05.03.02 Circulating cooling water system and fire-fighting water system

The circulating water system and fire-fighting water system is local control mode, the control panel is in the circulating water pump control room. The signal of pressure low for the header of the circulating water pumps is sent to the MARK V control panel.

05.03.03 Make-up water treatment system and chemical dosing system

Make-up water treatment system and chemical dosing system are controlled by PLC, the PLC and relevant instruments are supplied with the main equipment.

05.04 Local instrumentation

Measurement of plant process parameters utilizing signal-transmitting instruments such as sensors, process switches, thermocouples, RTD, transmitters, etc. is provided to support the control, monitoring, alarm and protection as well as for plant and equipment performance calculations. Local indicators, such as pressure gauges, thermometers, level gauges, site flow glasses, etc are also provided for maintenance, local monitoring and operation.
Local instrumentation, control box and control panel are provided near the process equipment in the main building to monitor and control the unit.
The transmitters are two-wire, signal accuracy within 0.25%, zero drift less than 0.25% type.

2.

05.00 INSTRUMENTATION & CONTROL (I&C)

05.01 Design and supply scope of I&C

The instrumentation and control system of this plant covers the thermal process control and monitoring of 8 sets of gas turbine unit (GT) and their auxiliary equipment and the balance of plant (BOP).

05.02 The control feature of the gas turbine generator

The control of the gas turbine generator is implemented by MARK V supplied with the gas turbine generator. MARK V consists of local panel and CRT station. The local panel is in the control cabin located at the head of the unit, and the CRT station is in the control room of 132KV switchgear control building, the communication medium is coaxial cable. Operator can supervise the main parameter of the unit, and can control the unit via the CRT station.

05.03 The control feature of the auxiliary system

05.03.01 Natural gas treatment control system and air compressor station

The natural gas treatment system is controlled by PLC. PLC cabinet is arranged at the air compressor house, and the CRT is arranged at the control room of 132KV switchgear control building, operator can supervise the main parameters of the natural gas treatment system, and can control the temperature and pressure of the natural gas, and so on.
The air compressors are controlled by the control panels supplied with the main equipment.

05.03.02 Circulating cooling water system and fire-fighting water system

The circulating water system and fire-fighting water system is local control mode, the control panel is in the circulating water pump control room. The signal of pressure low for the header of the circulating water pumps is sent to the MARK V control panel.

05.03.03 Make-up water treatment system and chemical dosing system

Make-up water treatment system and chemical dosing system are controlled by PLC, the PLC and relevant instruments are supplied with the main equipment.

05.04 Local instrumentation

Measurement of plant process parameters utilizing signal-transmitting instruments such as sensors, process switches, thermocouples, RTD, transmitters, etc. is provided to support the control, monitoring, alarm and protection as well as for plant and equipment performance calculations. Local indicators, such as pressure gauges, thermometers, level gauges, site flow glasses, etc are also provided for maintenance, local monitoring and operation.
Local instrumentation, control box and control panel are provided near the process equipment in the main building to monitor and control the unit.
The transmitters are two-wire, signal accuracy within 0.25%, zero drift less than 0.25% type.

2.

06.00 CIVIL ENGINEERING WORKS

The whole civil engineering works as per the proposed works and supply scope cover:

A: architectural and structural design of the production shop, administration office building;

B: site layout planning;

C: construction of the production shop, administration office building excluding the piling foundations of building and of equipment below their ordinary concrete foundations if any and if requested.

06.01 Plot plan (drawing AF200127C-Z-01)

The plan of the gas turbine power plant is arranged according to assumed site. The natural gas is used as fuel. The interface of fuel supply is assumed 1m off the boundary fence.

Eight gas turbine units are arranged at the centre of the site. The interval between the gas turbine units is 35m . The site reserved for steam turbine units is located at the centre of gas turbine area. Auxiliary facilities spread around the gas turbine units. They are natural gas treatment station, cooling tower, circulating water pump station, fire-fighting water pump station and chemical water treatment plant, from north to south at the southern (drawing direction, same as below) side of the gas turbine area . The 132kV switchgear yard is placed at the north side of the site. The central control building, warehouse and garage, repair workshop and office building face the entrance to the western side of the site.

The road work within the boundary wall includes 6m wide of main road around the gas turbine and 5m and 4m wide of branch road. All the road pavement is C30 cast-in-site reinforced concrete slab. The cable trenches are built of C20 reinforce cement concrete. The boundary fence with a height of 2.4m are built around the power plant and switchgear yard. The style of the boundary fence adopts galvanized chain link mesh with three row barbed wires.

The occupied area of the power plant is about 11.075 hectare.

06.02 Site selection

The natural solid and strong ground without underground cave, lake, river and free from earthquake are the preconditions. In addition, distance of fuel, water, labour sources and main road from the site are key factors to be considered or the overall infrastructure costs are considerably high.

06.03 Architecture

06.03.01 Main building

Steel structure is adopted for central control building. Length is 27 meter and width is 15 meter. The height of building is 10 meter. Two floor. Includes central control room, electrical relay room, engineering workstation, batteries and DC room, MV switchgear room, LV switchgear room, 400VPC room.

06.03.02 Fire protection

Non-combustible or fire resistant components are used, means of escape is provided to enable staff to leave the premises in case of fire, all doors remain opened in the direction of personnel escape routes.

The building is compartmented to restrict the spread of fire. Walls, floors and other barriers separating compartments are such as to give two hours or more fire resistance. Where cable pipes or ducts pass through compartment walls, a barrier of non-combustible material is provided to ensure that the fire resistance of the wall, floor, etc is not reduced.

Doors are such as to provide the following resistance to fire:

(A) doors which protect escape routes for safety of personnel – 1 hour.

(B) doors which prevent the spread of fire between compartments – 2 hours and

(C) Central control room (C.C.R)

The central control room is designed and built to resist dust, heat, vibration and noise. With a tiled floor of anti-sliding and a ceiling of gypsum, the central control room (C.C.R) is built with entrance

vestibules at the entrance doors and is enclosed by a special polythenere panel (i.e. thermal impact panel) so as to give a defence against dust, heat, vibration and noise.
The colour and lighting provided for the C.C.R are important to the quality of environment. Therefore, the colours for the floor, faces and ceiling of the C.C.R are designed in such a way to give an effect reflecting a contrast from dark to light. For augmenting the intensity of lighting for the C.C.R, the floor is tiled with brownish yellowed colour; the faces of the wall is colourfully coated with light yellowish colour; and the ceiling of whitish asbestos panels is suspended by t-shaped joists of aluminium alloy. An annular light band is also provided on the ceiling in order that not only the requirements of lighting is met, but also a glare reflecting from the ceiling is avoided, thus achieving a complete composition on it.

06.03.03 Codes and standards

The following China national codes and standards including commentary and addenda are used by the Contractor. If the codes and standards being used by the Contractor are not listed blow, it will be provided to the Employers for approval in due course.

Application/location	Standards and Codes adopted by the Contractors
General	DL5000-2000:Technical Code for Designing Fossil Fuel Power Plants
	DL5022-93:Technical stipulation for the design of civil structure of thermal power plant
Fire protection	GB50229-96: Code for fire-protection design power plant & substation
	GBJ 16-87: Code for fire-protection architectural design
Finishing	DL5029-94: Standard for designing of architecture finishing of fossil fuel power plants
Dynamic machine foundation	GB50040-96: Code for design of dynamic machine foundation
Construction and acceptance	GB50205-95: Code for construction and acceptance of steel structure engineering
	GB50204-92: Code for construction and acceptance of concrete structure

06.03.04 List of buildings in the plant

no.	name of building	floor	height, m	total, sq.m
1	Central control room	2	10	820
2	Administration office	2	7.5	1,200
3	Warehouse & garage	2	8.4	600
4	Repairing workshop	1	5	200
5	Switch-gear room	1	3.5	72*8=576
6	Water treatment plant	1	7.8	624
7	Waste water treatment plant	1	4	432
8	Circulating water treatment plant	1	14.5	144
9	Unit draining trough	1	3.5	48
10	Clinic	1	3.9	120
11	Total construction dimension			4,764

The gas turbine equipment (except the central control system) is mounted in dust and rain free containers and is designed for installing outdoor without roofed shed. On request, prefabricated shed can be provided at extra cost.

06.03.05 Architectural decoration

no	name of room	flooring	wall & dado	ceiling	door, window
1	Administration office building				
	Office	PVC plastic floor or floor tile	Paint	Gypsum	Aluminium alloy window and wood door
	Meeting room	ditto	ditto	ditto	ditto
	Duty room	ditto	ditto	ditto	ditto
	Communication equipment plant	Electrostatic prevention movable floor board	ditto	ditto	ditto
	Power supply equipment plant	ditto	ditto	ditto	ditto
	Service workshop	ditto	ditto	ditto	ditto
	Lavatory	Floor tile	Tile	ditto	ditto
2	Central control building				
	Control room and electric relay plant	PVC plastic floor or floor tile	Paint	Gypsum	Aluminium alloy door and window
	Reception room	ditto	ditto	ditto	ditto
	Protective testing plt	ditto	ditto	ditto	ditto
	Battery plant	Acid proof tile	Acid proof paint	Acid proof paint	Steel door and window
	Tea room	Floor tile	Tile	Gypsum	Wood door
	Lavatory	ditto	ditto	ditto	ditto
3	Warehouses and service workshop				
	Workshop	Terrazzo	Paint	Paint	Steel door and window
	Warehouse	ditto	ditto	ditto	ditto
	Office	ditto	ditto	ditto	ditto
	Lavatory	Floor tile	Tile	ditto	Steel window and wood door
4	Chemical water treatment plant				
	Chemical water treatment plant	Corrosion proof tile	Corrosion proof paint	Corrosion proof paint	Steel door and window
	Laboratory	ditto	ditto	ditto	ditto
	Chemical warehouse	ditto	ditto	ditto	ditto
5	Air compressor station				
	Air compressor station	Terrazzo	Paint	Paint	Steel door and window
	Duty room	ditto	ditto	ditto	Steel window and wood door
6	PC distribution plant	ditto	ditto	ditto	Steel door and window
7	Battery plant				
	Battery plant	Corrosion proof tile	Corrosion proof paint	corrosion proof paint	steel door and window

no	name of room	flooring	wall & dado	ceiling	door, window
	Acid mixing plant	ditto	ditto	ditto	ditto
	DC panel plant	PVC plastic board or floor tile	Paint	Paint	ditto

06.04 Construction & tools materials surplus and equipment

The production shop and office building are built by the Contractor. Any tools, materials surplus and equipment supplied by Contractor for the civil engineering construction work and for Contractor and/or his staff's private use shall remain on Contractor's property and Employer shall allow Contractor to remove them from the site at any time at Contractor's discretion.

06.05 Residential area living quarter

The design and construction of the above are not taken into account. It is proposed that the Employer would authorize the Contractor to execute these works at extra cost especially when the expatriate staffs from Contractor's country are employed to run the place. The Contractor and the expatriates are oriented from a same culture, it is feasible for the Contractor to design and build these premises.

06.06 Extra civil engineering work

The land clearing and survey, engineering geological survey, bored-well (including pump station, pipeline and water tower), construction of the piling foundations of building and of equipment below their ordinary concrete foundations if any and if requested, construction of the piling foundations of concrete chimney if any and if requested, construction of road from site to the main road, construction of living quarters, connection and erection of external natural gas, fresh water and electric power supplies to the site's boundary are at extra cost if any. These costs could only be quoted upon receipt of the completed questionnaire, after site visit, soil survey and test and on completion of its/their previous works.

It is advisable for the Employer to complete the land clearing and survey, engineering geological survey (soil survey and soil test) work immediately after signing contract or it would delay the civil engineering design.

06.07 Local filing and approval of design

The architectural, structural, mechanical and electrical designs of the buildings premises of the proposed power plant are undertaken by a team of Chinese registered competent and well experienced architects and engineers in accordance with the prevailing Chinese Standards. Even though, it is the Employer's responsibility to have the designs duly filled with their government authority concerned and to obtain their approval at their own costs and expenses as soon as possible before commencement of the civil engineering work in event the filing and approval are required by local laws, practice, council and regulations.

2.

07.00 FRESH WATER SUPPLY

07.01 Design condition

At lack of supporting data and information from the Employer, the following conditions are assum for design:

No.	Assumed conditions
01	Circulating water system – it is used as secondary circulating water supply system.
02	Make-up fresh water system – It comes from the outside of the plant and its quality is assumed as: SS<=100mg/l, Ph=6.5—9.5
03	Fresh water source – ex site boundary, quantity available is abundant
04	Rainwater – it is in gravity system and then flow to the site outside the plant.
05	Sewage water – it is a separate system apart from the rainwater system and it is treatec to meet the requirements of environment protection.
06	Barometric pressure :1,000 mbar
07	Average temperature in rain season : 27 °C
08	Average temperature in dry season: 35 °C
09	Relative humidity: 48%

Drawing no. AF200127C-S-01, 02

07.02 Fresh water quantity

07.02.01 Circulating water quantity

Circulating water quantity for GT. Aux. Equipment is as follows:

Unit Capacity	Aux. Equipment Cooling Water (t/h)	Total (t/h)
8x40MW	2,360	2,360

07.02.02 Make-up fresh water quantity

The make-up water quantity for the plant is as follows:

No.	Application	Quantity, t/h	Remarks
1	C.W. evaporation	36	
2	C.W. drift	4	
3	C.W. blowdown	10	
4	chemical water	4	
5	potable water and other	10	
6	Total	64	

07.03 Circulating water system and arrangement

07.03.01 Circulating water system

The C.W. system is of a secondary circulating water supply system.
The circulating water system is designed as follows:

outlet of the cooling tower basin --- suck basin --- C.W. pump house ---
C.W. pressure steel pipe ---- GT. Aux. equipment ----C.W. drainage pipe ------ cooling tower.

07.03.02 Arrangement of the C.W. system

The C.W. pump station is designed and built. The above ground size of pump station is about L18 × B10 × H8 meter while the underground size of pump station is about L13 × B10 ×H3 meter.

The following equipment is installed for the system:

No.	Description	Remarks
1	circulating water pump	
2	electric butterfly valve	
3	double girder overhead travelling crane	
4	circulating water pressure pipe	
5	circulating water drainage pipe	
6	induced draft cooling tower	
7	other ancillaries	
8		

Induced draft cooling tower

The design point of the cooling tower is based on assumed following assumption:

The relative humidity is about 60%,

The air temperature is about at 34℃,

Barometric pressure is about 1000mbar.

No.	Description	Specification	Remarks
1	Tower cooling capacity (m^3/h)	2,360	
2	Water flow per cell (m^3/h)	590	
3	Inlet water temperature (℃)	44	
4	Outlet water temperature (℃)	35	
5	Numbers of cell	4	
6	Type of arrangement	One line	
7	Tower size (one cell) L×B (m)	8×8	
8	Total length (m)	32	
9	Total width (m)	8	
10	Total height (m)	8	
11	Fan diameter (m)	4.7	
12	Fan motor power (kW)	30	

Cooling tower is installed outdoor with cooling water basin. Cooling tower consists of housing, filling, air inlet opening, water distribution system, fan, speed reducer, support frame, sound absorption material, water inlet and outlet, overflow and drain pipe, etc.

Tower housing is made of reinforced concrete structure to ensure the durability. The filling is made of PVC film filling which creates more flow, less wind resistance, high heat exchange efficiency.

The fan is low noise, high efficiency axial flow type.

Circulating water pump

Circulating water pumps are provided with 5×100% capacity, four on-line and one standby.

Capacity (m^3/h)	590
Delivery head (m)	20
Pump motor power (kW)	60

Electrical butterfly valve

There is an electric butterfly valve at the outlet of each C.W. pump.

Double girder overhead crane

There is a double girder overhead travelling crane with hoist in the pump station for use during maintenance.

Circulating water pressure pipe

There are two DN600 C.W. pressure pipes for units. Total length is about 400m, the wall is about 6 mm thick.

Circulating water drainage pipe

There are two DN600 C.W. drainage pipes for units. Total length is about 400m, the wall is about 6 mm thick.

07.04 Make-up fresh water system

The make-up water comes from outside of plant boundary. Its water quality is assumed as:
SS<=100mg/l,
pH=6.5-9,
pressure 2.5bar,
Diameter of make-up water pipe is about DN150. Make-up water is sent to the cooling tower basin, fire fighting water basin. The other is sent to a filter for further treatment as potable water.

07.05 Potable fresh water system

The maximum hourly water consumption is $12m^3$, the volume of potable water basin is $200m^3$.
The flow diagram of potable water system is as follows

make-up water --- filter --- disinfection --- potable water basin

--- automatic water supplier --- user.

07.06 Sewage water system

The sewage water is collected by pipe at various points and then flow to the sewage water regulating pond. It is pumped into the sewage treatment facility. After treatment, the water is discharged to the rainwater system. The sewage water treatment facility is the secondary treatment.
Before treatment, the quality of sewage water: is BOD_5=220mg/h, SS=250mg/l.
After treatment, the quality of sewage water: is BOD_5<=20mg/h and SS<=25mg/l.
The flow of the treatment is about $5m^3/h$. There are two treatment facilities in the plant.

07.07 Rain water system

All surface rain water is collected by gravity by the rain water pipe and discharged to the open space outside the site boundar.

07.08 Brief of water supply and treatment system

The whole combined cycle gas turbine power plant's water supply, drainage, recycle system could be described in chart form as follows.

For convenience of future expansion, provisions - access of the whole steam boiler consumption system and partial of cooling water, chemical water treatment systems is taken into consideration in the current phase one - single cycle plant construction.

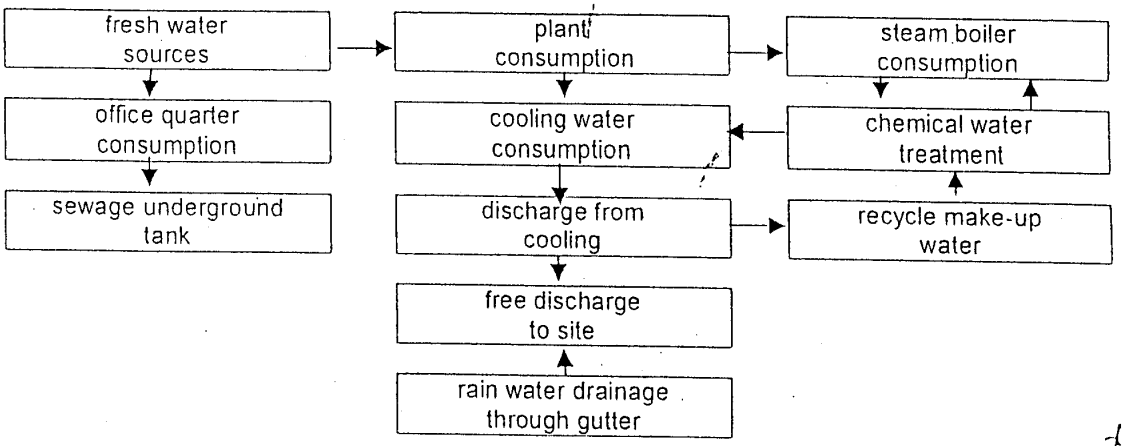

2.

08.00 WATER TREATMENT

08.01 Scope of water treatment (drawing no. AF200127C-H-01,02)

The chemical water treatment plant including the following system and devices is designed to process water to the specified quality standard:

- Water treatment system
- Hot water boiler chemical injection system
- Laboratory

08.02 Water treatment system

08.02.01 System function

The water treatment system is of sufficient capacity to meet all make up requirements of the plant under all conditions of operation including makeup water for the boiler and for any other specified duty.

08.02.02 System description

- Capacity of the system

The normal capacity of the water treatment system is 4 t/h.

- System process flow

According to the water source composition and the water quality requirement of the plant, the water treatment system process flow is as follows:

Raw water from water supply → clarify water tank → clarified water pump → filter --→ activated carbon filter → safety filter → high pressure pump → RO skid → demineralized water tank → demineralized water pump → plant user.

Activated carbon filter is installed to remove the free sodium-hypochlorite. The treated water quality (conductivity at 25°c : ≤ 0.2 μs/cm and SiO_2: ≤20 μg/L) copes the limit

08.02.03 Design condition

-- Technical Data

description	Demineralized rate	Recovery rate	remark
RO system	≥95%	75%	

-- Materials

The materials used for the following water treatment plant equipment strictly comply with all the planning, environmental and safety regulations and have been repeatedly evidenced by existing plants of its kind.

- All the valves, piping and accessories for raw water are made of carbon steel
- All the valves, piping and accessories from filter inlet to RO inlet are made of carbon steel
- All the piping and accessories from RO outlet to user are made of stainless steel pipe.

--- Measuring

The following measuring instruments are installed:

- Flow indicators at raw water from water supply
- Flow indicators at filter inlet
- Flow indicators at backwash water pump outlet
- Flow indicators and totaliser at RO inlet
- Flow indicators and totaliser at RO outlet
- Flow indicators and totaliser at RO outlet
- Conductivity indicator / recorder / alarms at RO outlet
- Turbidity at the filter outlet
- Free chlorine at the RO inlet
- High-low level alarm and level indicator at all the tanks and basins.
- Pressure indicator at all the pumps inlet and outlet
- Pressure indicator at filters and exchange units.

08.02.04 Fresh water source and composition

The design is based on the following assumption of water source and composition:

no	composition	limit
01	pH	8.20
02	Conductivity at 25 degrees Celsius (micro Siemens/cm)	1210.00
03	Total Dissolved Solids (mg/l)	650.00
04	Total Alkalinity as CaCO3	37.00
05	Total Hardness as CaCO3	225.00
06	LSI at 30 degree Celsius	0.11
07	Major Cations:	
08	Calcium as Ca^{++}	48.00
09	Magnesium as Mg^{++}	26.00
10	Sodium as Na^{+}	146.00
11	Potassium as K^{+}	6.00
12	Major Anions:	
13	Chloride as Cl^{-}	284.00
14	Sulphate as $SO4^{--}$	97.00
15	Bicarbonate as HCO_3^{-}	45.00
16	Silica as SiO_2	
17	Cation in MEQ/L	10.85
18	Anion in MEQ/L	10.77

08.03 Chemical Laboratory

A chemical laboratory comprising one complete set instruments and chemicals as stated in the equipment list is provided for analysis of water, oil quality and composition.

08.04 Main equipment

Filter

The filter is made of welded carbon steel, fabricated, designed, tested and stamped in accordance with the latest revision of Chinese standards. The design pressure is 0.6MPa.

The filter is equipped with steel structural support, manhole and pipe connectors with flange and other fittings. Upper and lower transparent observation windows is fitted on the shell of each vessel to inspect the operation condition..

The filter linear velocity as empty vessel is not more than 12m/h, the activated carbon filter linear velocity as empty vessel is not more than 20m/h, the multi-media filter have a minimum media bed

depth of 1.2 meter and the activated carbon filter has a media bed depth of 2 meter and with provisions included for 100 percent free board above the top of the media bed.
The filter has water distribution and collection device. The filters are furnished with an automatic valve nest and instrumentation etc, so that the filter can be automatically back washed and put into operation. The activated carbon filter is vulcanized with rubber inner lining up to the connector flanges with lining thickness not less than 3mm.

Safety filter

The filter is made of welded stainless steel, vertical axis safety filter, fabricated, designed, tested and stamped in accordance with the latest revision of Chinese standards.
The filter upper and lower transparent observation windows are fitted on the shell of each vessel to inspect the operation condition. The windows are transparent, anticorrosive and the thickness is capable of sustaining the test pressure of the vessel. The flanges of the windows keep in a same plane with the shell inner surface.
All the inner piping is connected with flanges constructed with stainless steel. The inner pipes are firmly fixed and are strong enough to sustain the water flash.
The vessel is also equipped with footing and other appurtenances for easy maintenance.
The filtering elements arrangements in the filter ensures even and uniform, either the collection of drain water or back wash water can be well distributed. All the inner arrangement is pre-assembled before shipment to assure erection quality and to prevent component from short delivery and damage in transport.
The stainless steel sampling cocks and sink on the inlet and outlet of filter are provided. The vent valve on the filter top and drain valve on the filter bottom and drain pipe is also made available.
The inlet and outlet pipes on the filter are equipped with manual valves with the same nominal size of the pipes.
The differential pressure transmitter with isolating valve and piping of stainless steel construction is fitted between the inlet and outlet of the equipment.
A pressure gauge is fitted on the inlet and outlet of filter. The structure of the filter is convenient for maintenance and dismantlement of filtering element fixed on the top plate. The upper end plate is connected to the shell by the flange.
The service life of the filtering element provided under the contract is not less than 2,000 hours. The filtering element is framework with winding-type. The slot width of the filtering element provided is 5 μm hole.

RO Device

RO device is the type of one stage with three sections, the flow rate 4 t/h, recover rate 75%, element demineralized rate ≥99.5%.
Flow indicators, temperature indicators, conductivity indicators, pH indicators and residual chlorine indicators are equipped on the inlet head pipe of RO device. The pressure gauge is fitted on the inlet header of each section, the different pressure meter is mounted between the first section and the third section. The flow indicator and conductivity meter is built on the demineralized water header.

Pressure Vessel

The pressure vessel is made of FRP, fabricated, designed, tested and stamped as per the latest revision of Chinese standards. The design pressure is not less than the shut off head of the upstream water pump.

RO membrane elements

The membrane has a good demineralized performance as follows:

•	Membrane element length, mm	1,000
•	Demineralized rate, %	99.5
•	Pure water capacity, m^3/d	7
•	performance determination conditions	
	inlet water concentration, % Nacl	0.05
	operation pressure, Kgf/cm^2	15
	operation temperature, °c	25
	one element recover rate, %	10-20.
•	Using conditions	
	Max. operation, Kgf/cm^2	30
	Max. operation temperature, °c	40
	Max. inlet water rate, l/min	42
	Inlet water turbidity, FTU	less than 4
	Inlet water PH:	2-10
	Normal operation pressure, Kgf/cm^2	8-12

Make-up water tank

The make-up water tank is $400m^3$, welded steel construction completed with steel coil up ladder for maintenance, external landing platform, tank up protection handrail .

It is equipped with level indicator with high and low alarm contacts, drain piping with valve at bottom, isolating valves on inlet and outlet and standard manhole for maintenance. The interior is shot blasted and applied with a suitable epoxy fiber glass coating to a recognized standard, with a total thickness not less than 1 mm.

Elastic contact pipe is installed between the tank inlet & outlet and the pipe connected with the tank for preventing the deformity and damage due to the tank settle down or movement.

The diameter size is 5.3m, overall height 5.6m, wall thickness 6mm, operation pressure 1 atm.

Clarified water tank

The clarified water tank is 50 m^3 , diameter 4m, overall height 4.3m, wall thickness 6 mm, operation pressure 1 atm.

The interior is shot blasted and coated with suitable epoxy paint, other specification is the same as the make-up water tank.

08.05 Hot water boiler chemical feed system

One set chemical feed system is provided for the hot water boiler.

2.

09.00 FIRE FIGHTING

09.01 General

It is designed to provide a safe operating environment for personnel and equipment. This is achieved by laying out equipment with sufficient separation and segregation to minimize the risks from fire and explosion and by selection of suitable equipment and materials. Hazardous areas are identified and suitable equipment is selected for use in these areas. Particular attention is paid to the lubrication oil, control oil and chemical storage and handling plants.

Automatic and manual fire detection and alarm system with detection devices selected to suit particular risks is installed. The control system is designed to provide operating and fire brigade staff with adequate information to identify and to respond correctly to any fire being detected.

Automatic and manual extinguishing system is built to limit the consequences of fire in the main plant and to minimize its effect of causing less generating capacity.

Water based fire system is provided to cover the complete plant. This main system consists of pipe rings and is provided with sectional isolating valves to allow the maximum supply of water in the event of fire. Hydrants at the strategic locations with hose and nozzles kept in suitable cabinets are provided. Hose cabinets, water spray and sprinkler systems are strategically located to deal with any hazard.

The pressured fire protection water is supplied to the water extinguishing system from the fire water basin. The fire protection and detection system is designed to cater for plant's needs and to provide optimum fire risk coverage at any and all plant conditions.

Water spray system is provided for main transformers.

A low pressure carbon dioxide system is provided in electronic and electrical rooms.

A high pressure CO_2 system is installed within the gas turbine accessory and load compartment enclosure.

Portable fire extinguisher is provided throughout the site with larger capacity units sited at the major risks area.

All equipment and escape routes are clearly marked.

The fire protection and detection system is monitored and controlled by a fire alarm and control panel (FACP) located in the central control room.

09.02 Codes and standards

All fire protection equipment, materials and components are inspected by the authority concerned to satisfaction and common equipment, materials are certified by recognized standard. All fire protection and detection systems are generally designed to cope Chinese relevant standard under the following codes:

GB50229-96 Code for fire-protection design power plant and substation

GBJ16-87 Code for fire-protection design building

GB50219-95 Code of design for water spray extinguishing systems

GB50193-93 Code of design for carbon dioxide fire extinguishing systems

GBJ140-90 Code of design for mobile extinguishers

DL5027-93 Typical regulation for fire-protection electrical equipment

GB50116-98 Code for design of automatic fire alarm system

09.03 Active fire protection

The fire protection system in the buildings and areas of the site complies with above-mentioned Chinese standards. It consists of the following main subsystem and the detailed supply is stated in the equipment list.

Fire hydrant and fire hose station
Water spray system
CO_2 fire extinguishing system
Mobile extinguishers and fire-fighting vehicle
Fire detection, alarm and control system

09.03.01 Water fire extinguishing system

The fire extinguishing water supply system ensures the adequacy of maximum volume of water demanded by fire fighting. It is to serve outdoor/indoor hose station as well as water spray system and reaches all the fire risk area on the site.

The fire water protection system consists of one 100% capacity diesel, two 50% capacity electric motor driven pumps, one electric jockey pump, a fire loop and a set of hydrant, stand pipe, hose station, electrical, control, instrumentation required for both the fire fighting pump and the associated equipment.

The jockey pump keeps the fire water system under pressure continuously. The pressure switch is assembled to start the pump.

The fire service water is taken from its basin source.

09.03.02 Fire hydrant and hose station

A hydrant and hose station system is located at various positions of the plant, outdoor and indoor. The fire hydrant is coupling type of relevant standard. Outdoor locations are protected by pillar hydrants, each with two 65 mm bib-nosed landing valve outlets and a main operating hand wheel. Underground pipe is 200mm nominal bore. The plant's indoor locations are protected by 65 mm gunmetal bib-nosed landing valves. All landing valves are made to standard. The administration office building, warehouse and service workshop are protected by indoor 25mm swinging hose reels. These are of either open or recessed type as appropriate to the location. The pillar hydrants are sited at a spacing of 70 meters at the perimeter of building/plant.

Sectionalising valves are installed in the system to facilitate maintenance of individual sections without the need to isolate the whole system.

Each pillar hydrant and landing valve are completed with a red fire service cabinet with stee hinges and bolts containing appropriate and adequate fire-fighting equipment.

Both underground and above ground pipes are hot dip galvanized and painted. In addition, th underground pipe is galvanized to the thickness determined by the ground settlement conditio and by the resisting force of damage by vehicle passing over.

09.03.03 Water spray system

A stationed high pressure water spray system is provided to cover all the main fire risks, it include generator, unit transformers and station transformer.

The water spray system is a stationed fire extinguishing system with piping, open nozzles and deluge valve station.

The open nozzles spray is protected with a water-fog in the event of fire. Transformer und protection has a minimum coverage rate of 20 litres/m^2/minute of equipment surface area whil surrounding plant and floor area in which leaking oil could spray/flow has a minimum coverage ra of 6 litres/m^2/minute of plant/floor area. The valve station is located at a safe and easily accessib place.

09.03.04 CO_2 extinguishing system

A low pressure CO_2 extinguishing system is fitted in the electronic and electrical room. It i completed with a low pressure vessels (-20℃: 20 bar), refrigeration unit, pipeline and extinguishin nozzles.

The high pressure CO_2 extinguishing system is provided in the gas turbine accessory and loa compartment enclosure and is supplied by the gas turbine vendor. It is completed with hig pressure steel cylinders (operating pressure at 20℃: 57 bar), pipeline and extinguishing nozzles.

A residual gas escape facility on the pipeline between the carbon dioxide storage tank and th protected risk for purposes of isolation is supplied.

09.03.05 Mobile extinguishers and fire fighting vehicle

In principle, CO2 fire extinguisher is used to protect electrical fire risks; dry chemical powd extinguisher is used to protect gas fire risks and solid material and foam extinguishers are used protect lube oil fire risks.

Portable extinguisher appropriate to the fire risk is sited at readily accessible fire points operation, service workshop, warehouse and administration office area.

09.03.06 Fire detection and alarm system

An addressable fire detection and alarm system is installed in all fire risk locations including tl main operation area, control bock, switchgear room, relay room, communications room, cab basement, cable tunnel, warehouse and administration office area. The fire detection system self-monitoring. Each detector is robustly tagged with a unique identification number and tl number of its detection loop. The detector delivers audible/visual annunciation to the central contr room. The fire alarm, detection, control system and the control room fire alarm panel (FAP) conta the following scope:

- Fire detection system specified herewith.
- All alarms generated by the stationed high pressure water spray and hydrant fire fighting syster
- All alarms including fault conditions generated by the smoke/heat ventilation system.
- "On/off" controls for smoke/heat ventilation fans.
- Fire pump alarm signals.
- "On" controls for the fire pumps ("off" control is not provided)

A single control room fire alarm panel is provided for the above specified alarm/control scope. Tl panel is of the mosaic type with detailed mimic diagrams as appropriate and has LEDS showi the location of the fire and the best point of access to the building.

The panel incorporates a single evacuation alarm toggle switch which set off an overall audibl visual alarm covering all the locations (indoor and outdoor) of the power plant.

Apart from audible alarm, red flashing lights are provided in case of noisy environment. Cabling fire evacuation sounders is fire resistant. Inward evacuation sounders/lights are from secu electrical sources and outward to individual sounders are from separate fused outlets whe practical. A red emergency programmable push button telephone is mounted on or by the side the fire alarm panel which is capable of making internal communication within the station and al of making outgoing calls to pre-programmed numbers outside the station.

The fire detection, alarm and control system has two sources of power - primary and seconda The primary source is monitored and alarmed upon failure. The secondary power supply usi storage batteries is capable of supplying the system under maximum normal load for 24 hours a then capable of receiving one fire alarm signal persisting for five minutes in the event of total fail

of the primary power supply. The secondary power supply can automatically transfer to operate the system within 30 seconds of the loss of the primary power supply.
The fire detection of gas turbine plants is provided by GTG vendor.

09.04 Passive fire protection

09.04.01 Separation, compartmentation and fire risk reduction measures

Fire risks is minimized where practical by the use of non-combustible materials, by separation and/or compartmentation of individual fire hazards and by their separation from sources of ignition. The plant is designed and engineered with a view to minimize fire risk. Where technica consideration permits, the fire reduction measures are to be perfectly incorporated:

09.04.02 Firestopping of service penetrations

Firestops are provided for all penetrations in walls, floors and ceilings of enclosed or separated fire risks including (but not limited to) switchgear rooms, relay rooms, communications rooms, cable basements, cable tunnels and the control room.

09.04.03 Fire protection of cables

Cables running in potentially fire exposed areas of the main fire risks are coated with a proprietary fire protection cable coat material or be fire resistant. Other equivalent means are also used.

09.05 Fire ventilation

The steam turbine plant roof is completed with a free vent area for smoke/heat ventilation.
All switchgear, relay, communications rooms/plants, cable basements, cable tunnels and contro plant are completed with induced draught smoke/heat extraction fans capable to efficiently clea the location of smoke/heat.

09.06 Emergency exit and access way

Emergency access ways and exits are provided to allow easy passage of persons to areas o safety in event of fire or other emergency.
In general, routes of access leads to areas of lower fire risk incorporating two or more further exi routes and are on a level or downward path. Where practical, two or more exit routes are made available from any one location. Dead ends are avoided. Emergency lighting are installed. Exi routes are clearly marked, painted and provided with emergency lighting.

2.

10.00 VENTILATION AND AIR CONDITIONING

10.01 Codes and standard

The design, supply and build works are based on the previous meteorological conditions assumption specified in 02.02.

Where necessary heating or cooling facility is provided, all the design, purchase, construction, acceptance for ventilation and air-conditioning conforms to the current prevailing codes and standards in China. It includes but is not limited to and/or is not lower than the following codes and standards where applicable and appropriate:

GBJ19—87	Code for Design of Heating, Ventilation and Air Conditioning Technical
DL5000—2000	Code for Designing Fossil Fuel Power Plants
GB 50229—96	Code for Fire-Protection Design Power Plant and Substation
DL/T 5035—94	Technical Specification for Designing Fossil Fuel Power Plants
GB50243—97	Code for Construction and Acceptance of Ventilation and Air Conditioning Works
GBJ 66—84	Code for Construction and Acceptance of Refrigerating Facilities Engineering
GBJ 16—87	Code for Fire-Protection Design Building
D5053—1996	Design Code of Labour Safety and Industrial Hygiene for Fossil Fuel Power Plants
GB50155—92	Terminology of Heating, Ventilation and Air Conditioning
GBJ 87—15	Code for Noise Control Design of Industry and Corporation
GB 4280—84	Exhaust Standard of Industry Pollutant

10.02 Indoor design condition and system type

The specified location is completed with ventilation and/or air conditioners for maintaining the temperature at particular constant degree as follows:

no	Buildings/plant/room location	system type	temperature ℃
1	No.1 & 2 6.6kV switchgear plant	V(M)	
2	Central control building		
	Central control room	AC(C)	25±1
	Electrical relay room	AC(C)	25±1
	Engineer workstation	AC(C)	25±1
	DC panel room	AC(C)	≤30
	Battery room	AC(C)	≤35
	No.1 & 2 MV switchgear rooms	V(M)	
	LV switchgear room	V(M)	
	Cable vault	V(M)	
	HV testing room	V(M)	
	Measuring instrument testing room	AC(C)	26~28

	Relay protection testing room	AC(C)	26~28
	Diesel generator plant	V(M)	
3	Switch cells		
	No.1,2,3,4,5,6,7,8 switch cells	V(M)	
4	Chemical water treatment plant		
	Water treatment plant	V(M)	
	Laboratory.	AC	26~28
	MCC room	V(M)	
5	Air compressor station		
	Air compressor station	V(M)	
	MCC room	V(M)	
6	Fire-fight water pump station		
	Fire-fight water pump station	V(M)	
	MCC room	V(M)	
7	Circulating water pump station		
	Circulating water pump station	V(M)	
	Chlorine dosing room	V(M)	
	MCC room	V(M)	
8	Administration office building		
	Offices etc.	AC	26~28
	MCC room	V(M)	
9	Warehouse and repairing workshop		
	Mechanical warehouse & service workshop	V(M)	
	Electrical & instrument warehouse	AC	
	Duty room	AC	26~28
10	Cable Tunnel	V(M)	

Notes:
1. AC = abbreviation for split air-conditioning system.
2. AC(C) = abbreviation for central air-conditioning system.
3. V(N) = abbreviation for natural ventilation system.
4. V(M) = abbreviation for mechanical ventilation system

10.03 Ventilation system

No.1 & 2 6.6kV Switchgear Room, No.1, 2, 3, 4, 5, 6, 7, 8 Switch Cells, HV Testing Room & HV Switchgear Room & LV Switchgear Room in Central Control Room, MCC Rooms in Plant Auxiliary Buildings.

Mechanical ventilation is adopted with air drafted in through filters; and mechanical ventilator can be concurrently used as emergency exhauster for No.1, 2 6.6kV Switchgear Room, No.1; 2, 3, 4, 5, 6, 7, 8 Switch Cells, HV Testing Room & HV Switchgear Room & LV Switchgear Room in Central Control Room, MCC Rooms in Plant Auxiliary Buildings.

Air changes per hour for ventilation is not less than 10 times. The power of axial fans a automatically shut down when a fire happened.
The ventilation system is composed of axial fan, gravity damper, power cable, etc.

Battery room in central control building

The battery room in Central Control Building is installed with explosion-proof type exhaust fans f acid and hydrogen gas dilution.
The ventilating system ensures the maximum hydrogen content in the air (by volume) n exceeding 0.7%, furthermore, the air changes are not less than 6 times per hour.
The outdoor air is filtered before entering into the battery room. Battery Room is maintained und negative pressure.
The air distribution of ventilating system equalizes and avoids airflow short circuit and dead corne
Each exhaust fan is of direct-driven axial type, completed with explosion-proof motor.
Anticorrosive materials are used for fabrication of ventilation equipment, air ducts and accessorie:

Diesel generator plant

Ventilation for Diesel Generator Plant is determined by the following requirements and mechanic ventilation is adopted.
The larger value of the following calculation results is used for the ventilating air volume.
(1) The designed air volume required for the exhaust of the residual heat.
(2) The rate of air exchange is not less than 10 times per hour.
The indoor air is strictly prohibited from recycling. The air exhaust fans and motors are explosion-proof type and are directly coupled.

Cable tunnel

Cable Tunnels are installed with jet fans so as to eliminate indoor excess heat.

Chemical water treatment plant

Water Treatment Plant is installed with mechanical air exhauster, with the rate of air exchange n less than 15 times per hour. Protection from corrosion is considered for the ventilating equipmer ducts and its accessories.

Air Compressor station

Ventilation is considered for Compressor Station so as to eliminate indoor exhaust gas.

Warehouse, service workshop, fire-fighting water and circulating water pump stations

They are completed with mechanical ventilation systems.

Lavatory

The lavatories are completed with toilet ceiling type ventilators. The make-up air is delivered v low level louver in the door.

10.04 Air-conditioning system

Central control building

Central Control Building is served with a central air conditioning systems so as to maintain indo temperature at 24±2℃ constantly.

The served area of rooms in the central control building by air conditioning system is 398m^2. Ti air conditioning system cooling load is 139.3kW or so.

The plant consists of two air-cooled type air handling units of identical size and heavy-du construction and each of the units has two isolated refrigeration cycles at least.

Air handling units can be automatically switched over each other in the event of failure.

Distributed ductwork with supply and return grilles is provided for supply and return system.

The fresh air is to maintain the rooms at about +5Pa positive pressure at all times.

Each air-cooled type air handling unit is rated at 50% of the rooms duty and comprises t following function sections in turn:

1	Compression and condensing unit section
2	Fresh air and return air adjustment section
3	Mid-efficiency filter section
4	Evaporating coil and electric heater and electric humidifier section
5	Supply fan section

Laboratory, etc.

Split air-conditioners are supplied for laboratory, etc. so as to maintain indoor temperature 26~28℃ constantly.

Administration office building, duty rooms in auxiliary buildings, etc.

Air-conditioning system is installed in the Administration Office Buildings, duty rooms in auxilia buildings, etc.

2.

11.00 INPLANT TELECOMMUNICATION

11.01 General description

For communication of the proposed power plant, two systems are designed and installed in accordance with the following codes and standards:
internal communication system and PLC communication system:

ITU-T	International Telecommunication Union-Telecommunication
IEC	International Electromechanical Commission
ISO	International Standard Organization

11.02 Internal communication system

The internal power plant communication system consists of administrative communication and intercommunication paging subsystems.

11.02.01 Inplant telecommunication chart

Administration trunk system	20 external trunk lines	- built by local company
	200 internal lines	- supplied by Contractors

Intercommunication paging system at various spots	desk call station	- supplied by Contractors
	wall call station	- supplied by Contractors
	amplifier	- supplied by Contractors
	loudspeaker	- supplied by Contractors

11.02.02 Administrative communication system

The system is comprised of PABX switchboard and the auxiliary equipment, main distribution frame, distribution terminal equipment, cable network, etc. It not only provides the communication among designated locations in the power plant, but also realizes the external communication with the local public telephone network and power system communication network.
In the project, PABX switchboard with not less than 10 external trunk lines and not less than 128 internal lines extensions are installed to cover the plant. The maximum expandable capacity of the PABX switchboard is 256 extensions.

11.02.03 Intercommunication paging system

The system includes central control cabinet, desk call station, wall call station, amplifier and loudspeaker, distribution equipment and cable network.
The system can accomplish two-way communication by the page/party function and spread message, alarm signal, at the same time and it is easy to find the shifting staff by the broadcasting function.
The call stations are distributed in the important posts in the plant. The type of the call station is determined by the detailed condition and equipment.

11.03 Distribution equipment and cable network

The cable network for the administrative communication system includes MDF, cable jointed cabinet, terminal box, telephone socket, cables and wires.
The safety distribution boxes and cable connecting boxes are arranged indoor or outdoor as required, they are damp-proof, dustproof, fireproof, acid-proof, caustic-proof, sealing and are completed with over-voltage (over-current) protection.

Terminal boxes and communication sockets are of wall type.
Cable is laid along with electrical cable trench (tunnel and tray); in case electric cable trench is not available, it is laid through buried conduit direct.
Communication cable is of stranded conductor with diameter not less than 0.5mm, they are damp-proof, dust-proof, fire-proof, acid-proof, caustic-proof and non-spreading of fire.
The cable network for the dispatching communication system is star network. The cables are private communication ones.

11.04 Communication power supply

PABX for the administrative communication system power is supplied by a set of uninterrupted D.C power equipment. The power supply system consists of high frequency switch power equipment and maintenance-free battery. Paging system power is provided by A.C 220V UPS

11.05 Communication rooms

Communication rooms for administrative communication system are in the control building which includes communication equipment room, battery room, duty room and maintenance room.
PABX switchboard and main distribute frame (MDF) are all installed in communication equipment room.
The control cabinet for intercommunication paging system is installed in the central control room.

11.06 Power line carrier communication

Two PLC channel is built on each of four power transmission lines from the proposed power plant to opposite transmitting dispatching speech, telecontrol and teleprotection signals. For all PLC channels, PLC terminal equipment, line trap, CVT and matching device are supplied.

11.07 External communication facilities

It is advisable for the Employers to apply for external communication service by all means from both local government authority and service companies, ie fax, email, internet, satellite receiver, domestic and overseas trunk lines.
It is crucial when the expatriate employees are stationed and when local employee living quarter are provided at the site, it could minimize mobility of the employee and improve production environment socially in certain extent.

2.

12.00 PROPOSED WORKS AND SUPPLY SCOPE

Both Employer and Contractor are liable for the following works and supply scope otherwise as per the Contract terms and conditions.

12.01 Contractor's works and supply scope

The Contractor is liable for the following works and supply scope at the costs either included or excluded in the preliminary proposal.

In general and unless otherwise stated expressly, the Contractor's works and supply scope in question only cover the works and supply that begin from fuel site connection and end at internal power substation (levels 2 – 5 as per the above flow chart) while the rest is either at extra cost or for power plant Employer's and / or grid Owners' account as these costs vary from site to site sharply. An offer covering the latter and additional works and supply is available in the final proposal.

12.01.01 Contractor's work and supply scope at costs included

Contractor's works and supply scope at the costs included in this preliminary proposal are as follows and are implemented by him only against value received.

no	works and supplies
O1	planning design of site layout
02	architectural and structural design of production shop, internal road and administration offices building
03	structural design of building and equipment ordinary concrete and their ordinary concrete foundations including ground treatment engineering design
04	design of inplant fresh water supply, treatment & drainage system
05	design of inplant fire fighting, ventilation and telecommunication system
06	design of inplant electrical circuit system
07	design of production technique system of power plant
08	equipment and material for power plant and for its installation including spares, workshop
09	materials for no.02 - 03 infrastructure and superstructure but excluding ground treatment engineering below their ordinary concrete foundations of building and equipment.
10	materials for nos.04 – 06 system
11	home appliance and vehicle for Contractors' personnel
12	sea freight of Contractor's supply
13	assembling, installation and construction of nos. 02 - 06 for specified period but excluding ground treatment engineering and piling foundations of building and equipment below their ordinary concrete foundations
14	installation of no.08 for specified period
15	commission and test running of machinery and equipment supplied by Contractor
16	training of Employer's personnel in exporting country and at Employer's plant site
17	covering of erection all risks insurance of the power plant and third party liability insurance at the site
18	manual of machinery and equipment in English, two sets
19	drawings of all construction, layout, system designs in English, four sets
20	unloading port shipside to site road transport

Notes to no.	
09	materials for ground treatment engineering below their ordinary concrete foundations of building and equipment are at extra cost
13	works for ground treatment engineering below their ordinary concrete foundations of building and equipment are at extra cost.
***	management of production is under separate contract if applicable

[redacted]

12.01.02 Contractor's works and supply scope at extra costs

Contractor's works and supply at the costs excluded in this preliminary proposal are as follows and are implemented by the Contractor only against value received. The works and supply scope specified below are an integral part of the proposal and their costs will be quoted in the final proposal upon receipt of detailed design data from Employer and after the site visit by Contractor.

no	works and supplies
21	land survey of the site
22	engineering geological drill investigation and soil test of the site
23	architectural and structural design of living quarter of the power plant
24	structural design of road connecting boundary and external main road
25	planning design of external fuel, water and power supply to site boundary
26	construction of living quarter
27	construction of roads connecting external main road
28	infrastructure of green belt and landscape at site
29	installation of external fuel, water pipelines and power supply line to site boundary
30	bored-well including pump station, water tower and water treatment system if applicable
31	home appliance and vehicle for management expatriate employee
32	materials and works for ground treatment engineering including piling foundation of building and equipment below their ordinary concrete foundations if any and if required.
33	materials and works for external power substation
34	materials and works for external power transmission line from inplant substation
35	extra works supplies not for Contractor's account under the contract, if any

Notes to no.	
23	Living quarter – as close to the site as possible.
29	External supply of fuel, fresh water and power – Installation of fuel, fresh water pipeline and power supply line beyond the site boundary is at extra cost and a most economical distance is selected after the site visit.
30	Bored well fresh water supply – It is needed in event external clean fresh water supply by pipeline is not available at site.
32	Ground treatment engineering - The heaviest shipping package is 100 tons per single unit. In general, very strong foundations are needed for this type of industry. The design of the work is done after the engineering geological drill investigation report is received.
33	External power station – technical specifications are needed from Employer.
34	External power transmission line - technical specifications are needed from Employer
	2.

12.02 Employer's works and supply scope

The Employer's works and supply scope in this preliminary proposal at his own costs are as follows:

no	works and supplies
01	registration of power plant holding company
02	approval of operation licence, resources concession if applicable
03	approval of environment protection, hygiene, fire safety if applicable
04	acquisition of land
05	clearing, reclamation and levelling of land
06	filing construction design drawings with local government authority and obtaining their approval
07	supply of external fuel, water and power to site
08	covering of marine cargo insurances of Contractor's supplies from exporting country's warehouse to Employer's warehouse/site
09	import licence of Contractor's supplies if applicable
10	import duty of Contractor's supplies if applicable
11	discharge port disbursement of Contractor's supplies
12	warehousing and protection of Contractor's supplies in discharge port including road haulage and transit period.
13	covering of road transport insurance of the plant from discharge port to Employer's warehouse/site
14	covering of industrial accident risks of Employer's personnel at the site
15	covering of third party liability insurance after partial and final taking over
16	water, electricity supply for construction and for erection, commission works
17	resources for commission and test running of machinery, equipment
18	documents needed for Contractor's and management personnel visa application
19	approval and permit of work and staying for Contractor's personnel by Employer's government authority
20	approval, permit of work and staying for management personnel by Employer's government authority
21	land for office and accommodation for Contractor's personnel
22	accommodation, security protection and transport instrument for management Expatriate
23	appliance and furniture for offices
24	transport instrument for Contractor's personnel before their own supply is made available
25	connection of power supply from inplant transformer end to external grid
26	marketing and sales of the finished products
27	buildings and landscape maintenance tools and equipment
28	other works and supplies for Employer's account as under the construction contract
29	Contractor's corporation and personnel VAT, profit, income tax in Employer's country if any
30	full payment made to Contractor for their works and supply including extra works and supply
Notes to no.	
22	**Accommodation** – They are to be completed with air conditioners, kitchen, television and satellite receiver, telephone and fax machine, light and water supply, electrical appliance and complete furniture. Vehicles – Drivers, fuel, maintenance, insurance etc costs are for Employer's account.
25	**External grid connection** - It is assumed in the preliminary proposal that the power line is connected from the internal substation to the external grid. A most economical site is selected after the site visit and the installation of power transmission line from the internal substation is at extra cost if applicable.

Appendix 3 – Drawings For Single Cycle Gas Turbine Power Plant – 335MW

CONTENT

serial	drawing no.	drawing name	page
01	AF200127C-Z-01	plot plan	2-55
02	AF200127C-J-01	fuel gas system	2-56
03	AF200127C-J-02	cooling water system	2-57
04	AF200127C-J-03	compressed air system	2-58
05	AF200127C-J-04	plan arrangement of main block	2-59
06	AF200127C-D-01	electric key one line diagram	2-60
07	AF200127C-D-02	132kv switchgear layout	2-61
08	AF200127C-S-01	diagram of water supply system	2-62
09	AF200127C-S-02	water balance	2-63
10	AF200127C-H-01	makeup water treatment system	2-64
11	AF200127C-H-02	demineralised water storage system	2-65

Please note that the proposal together with its technical data, drawings remain on Contractors' property and that Buyers, Owners, Employers and their agents, employees shall not disclose them to any third party without the Contractors' consent in writing.

All Rights Reserved
File Name:

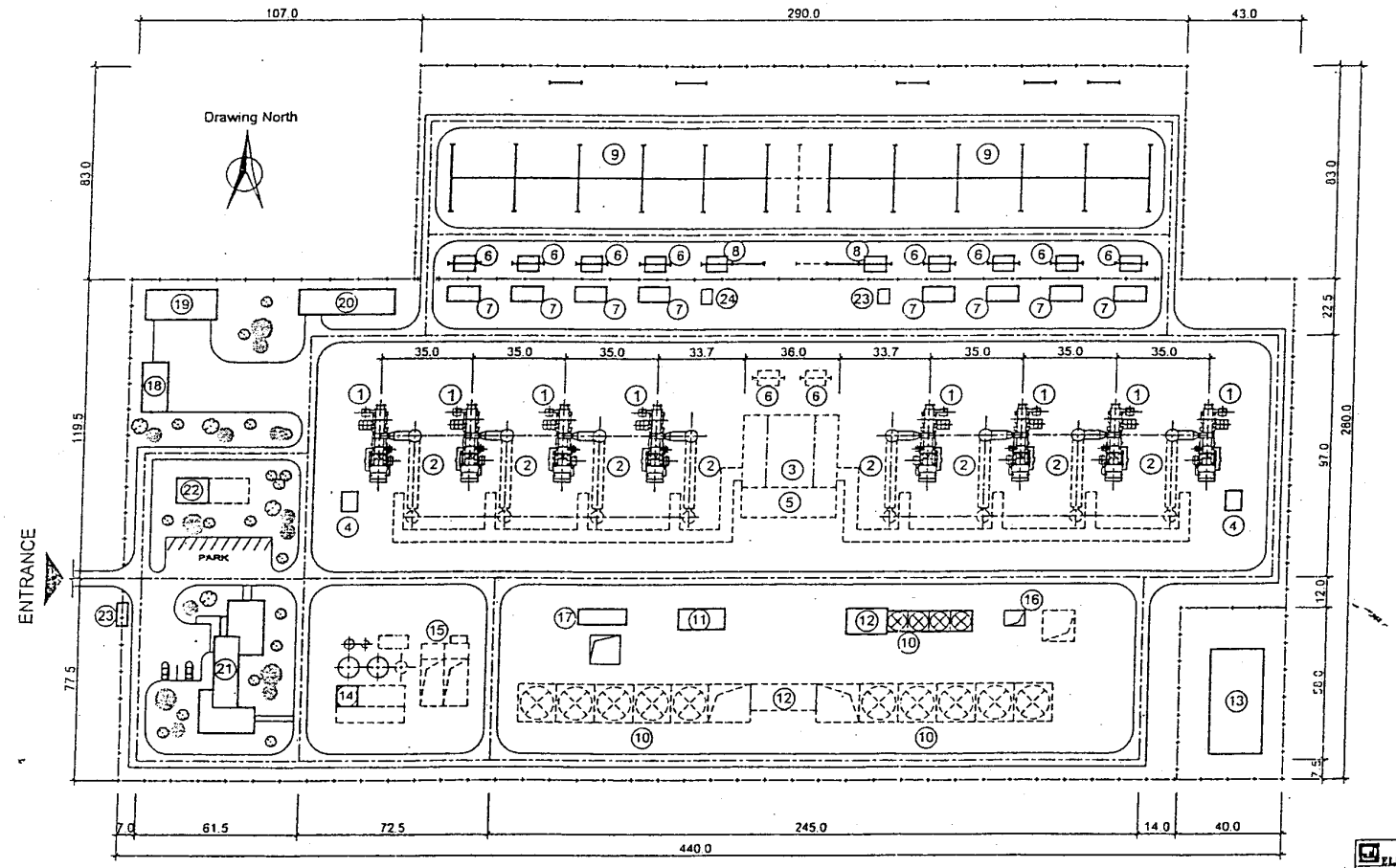

Buildings and Structures List

NO	Name	Remark
1	Gas Turbine Unit	
2	HRSG	
3	Steam Turbine House	
4	Unit Drain Samp	
5	Control Room	
6	Main Transformer	
7	Switch Cell House	
8	Start-up & Standby Transformer	
9	132kV Switchgear Yard	
10	Cooling Tower	
11	Circulating Water Treatment Plant	
12	Circulating Water Pump House	
13	Natural Gas Treatment Plant	
14	Water Treatment Plant	
15	Industrial Waste Water Basin	
16	Waste Water Pool	
17	Fire-Fighting Water Pump House	
18	Repair Workshop	
19	Material Storage & Garage	
20	Central Control Building	
21	Office Building	
22	Clinique Room	
23	Guard House	
24	Deluge Valve Room	

Note:

1. The area within the boundary fence is 11.075 ha.
   The length of the fence is 1845m.
   The area of road and square is 16800m^2.
2. The area in dashed line is reserved for further expansion.
3. The unit of the dimension is meter.

0 5 10 20 30 40 60 80 100 m

Scale Bar

CENTRAL SOUTHERN CHINA ELECTRIC POWER DESIGN INSTITUTE		Gas Turbine Power Plant, NIGERIA	DESIGN STAGE
CHIEF ENG	MAIN DESIGNER	Plot Plan	
CHIEF DESIGNER	CHECKER		
CHIEF ENG OF DEPT	DESIGNER		
SECTION HEAD	DRAUGHTSMAN		
DATE	SCALE 1:1000	DWG No	AF200127C-Z-01

All Rights Reserved

File Name

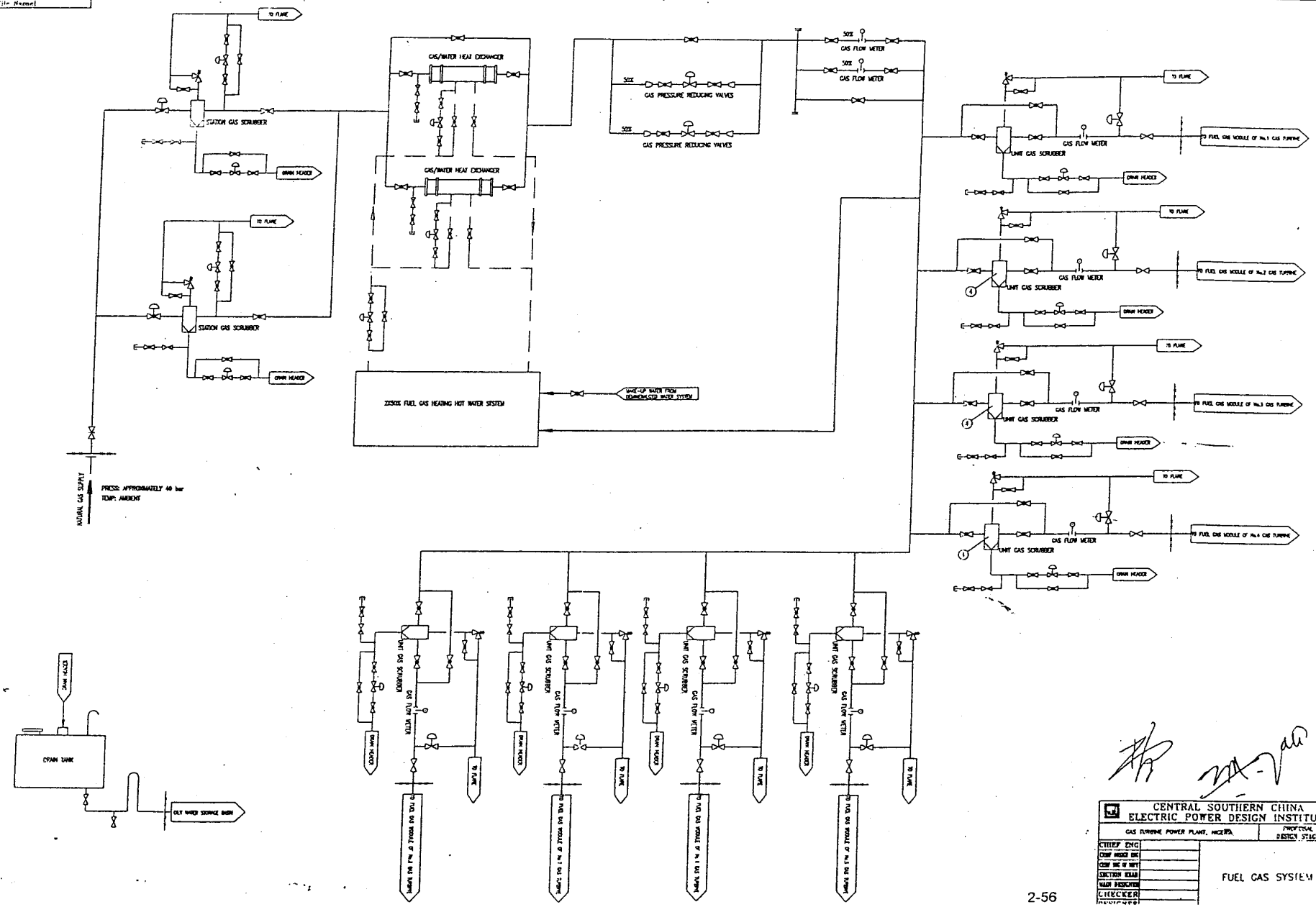

CENTRAL SOUTHERN CHINA ELECTRIC POWER DESIGN INSTITUTE

GAS TURBINE POWER PLANT, NIGERIA

PROPOSAL DESIGN STAGE

CHIEF ENG

CHIEF ENGINEER ENG

CHIEF ENG OF UNIT

SECTION HEAD

MAJOR DESIGNER

CHECKER

DESIGNER

FUEL GAS SYSTEM

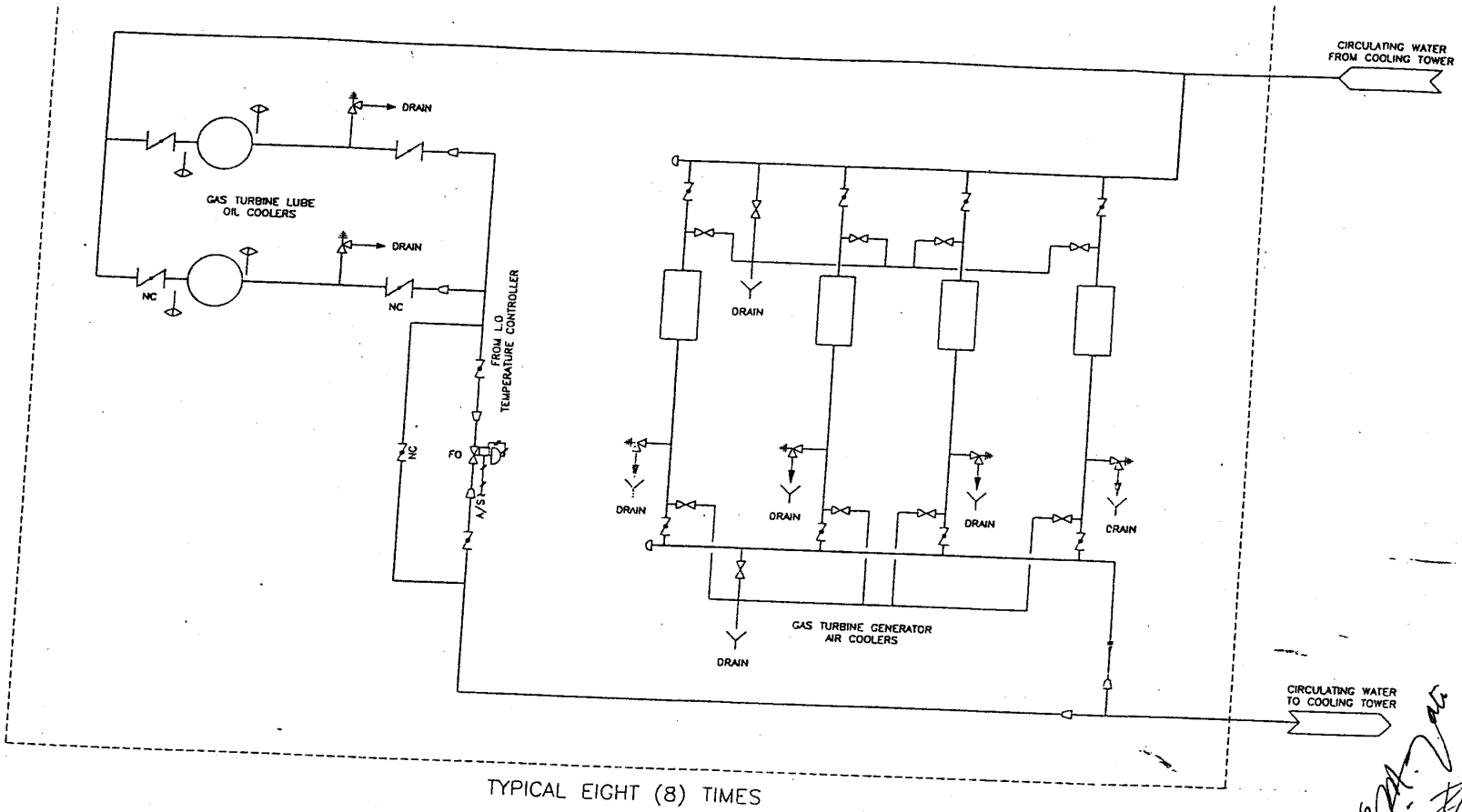

TYPICAL EIGHT (8) TIMES

CENTRAL SOUTHERN CHINA
ELECTRIC POWER DESIGN INSTITUTE

GAS TURBINE POWER PLANT, HUCHEN

PROPOSAL
DESIGN STAGE

CHIEF ENG
CHIEF MECH ENG
CHIEF ENG IN WT
SECTION HEAD
MAIN INSPECTOR
CHECKER
DESIGNER
DRAWSMAN

COOLING WATER SYSTEM

DATE | SCALE | DWG NO AF200127C-J-02

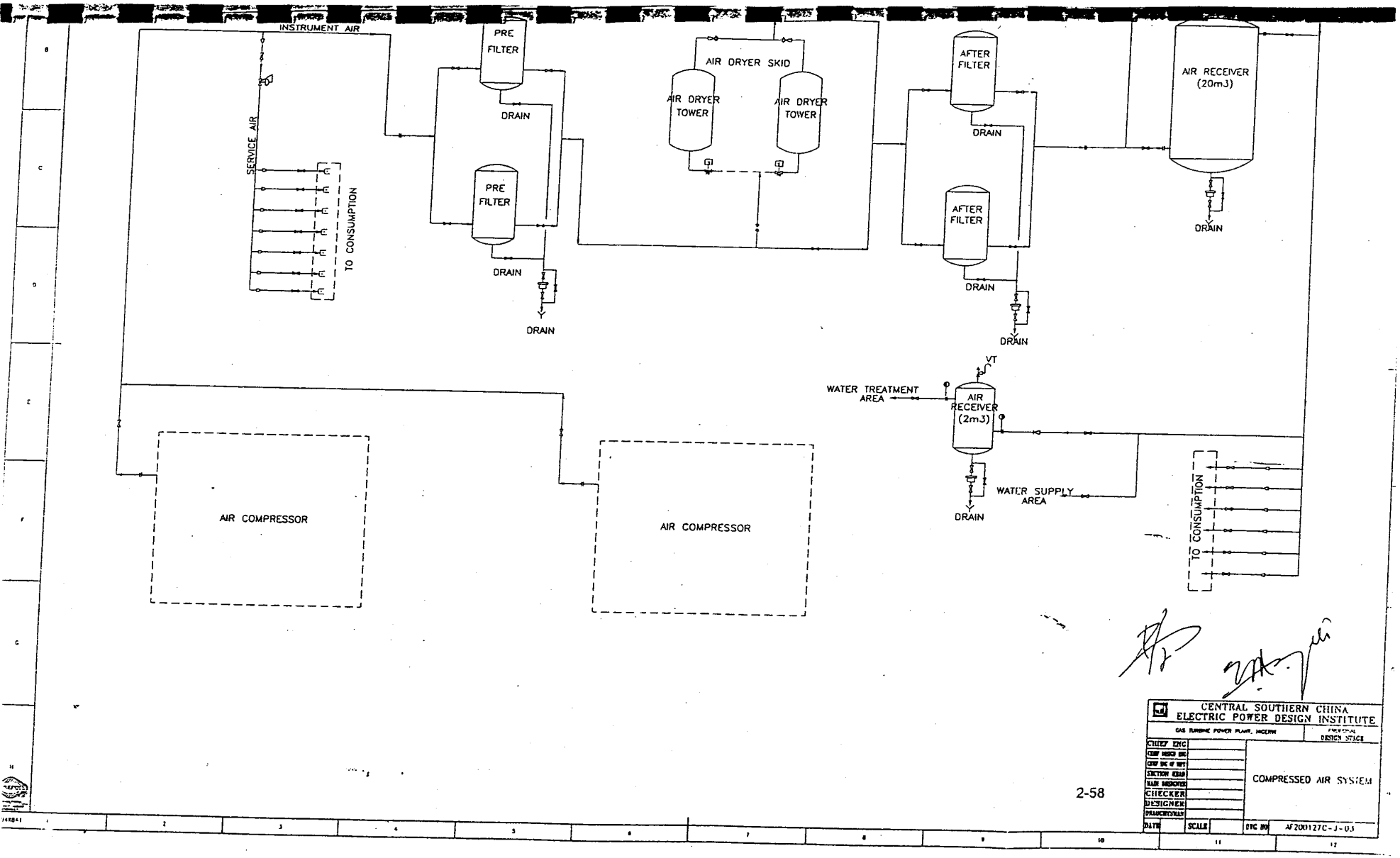
INSTRUMENT AIR
SERVICE AIR
TO CONSUMPTION
PRE FILTER
DRAIN
PRE FILTER
DRAIN
DRAIN
AIR DRYER SKID
AIR DRYER TOWER
AIR DRYER TOWER
AFTER FILTER
DRAIN
AFTER FILTER
DRAIN
DRAIN
AIR RECEIVER (20m3)
DRAIN
VT
WATER TREATMENT AREA
AIR RECEIVER (2m3)
DRAIN
WATER SUPPLY AREA
TO CONSUMPTION
AIR COMPRESSOR
AIR COMPRESSOR
CENTRAL SOUTHERN CHINA ELECTRIC POWER DESIGN INSTITUTE
GAS TURBINE POWER PLANT, HUCHUN
PRELIMINARY DESIGN STAGE
CHIEF ENG
CHIEF DESIGNER
CHIEF ENG OF UNIT
SECTION ENGR
MAIN DESIGNER
CHECKER
DESIGNER
DRAWER/DRAFT
COMPRESSED AIR SYSTEM
DATE
SCALE
DWG NO
AF200127C-J-03

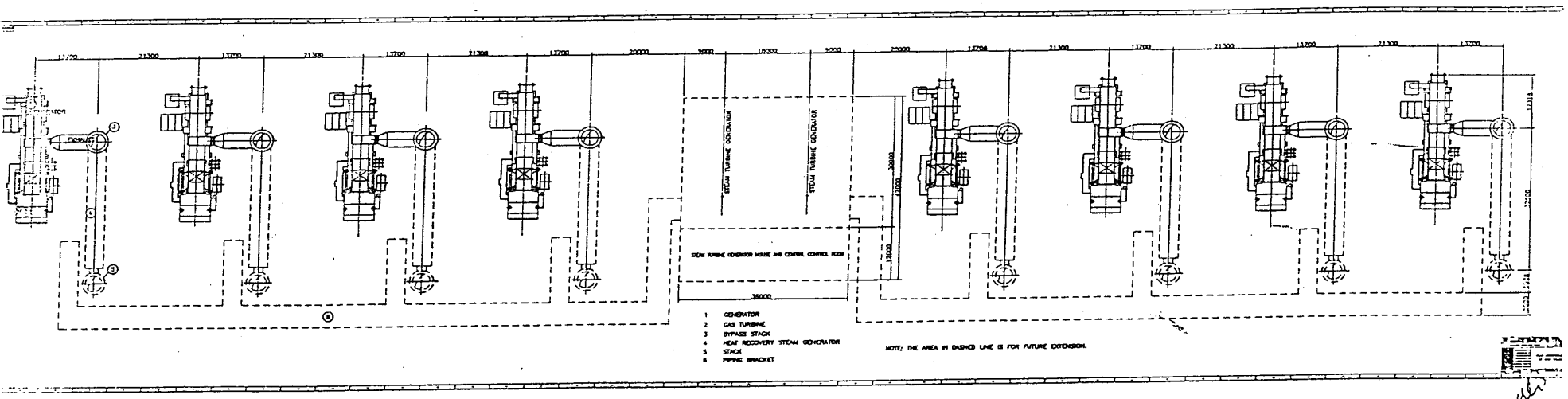
STEAM TURBINE GENERATOR
STEAM TURBINE GENERATOR
STEAM TURBINE GENERATOR HOUSE AND CONTROL CONTROL ROOM
1 GENERATOR
2 GAS TURBINE
3 BYPASS STACK
4 HEAT RECOVERY STEAM GENERATOR
5 STACK
6 PIPING BRACKET
NOTE: THE AREA IN DASHED LINE IS FOR FUTURE EXTENSION.

Rig Res 1

File Name

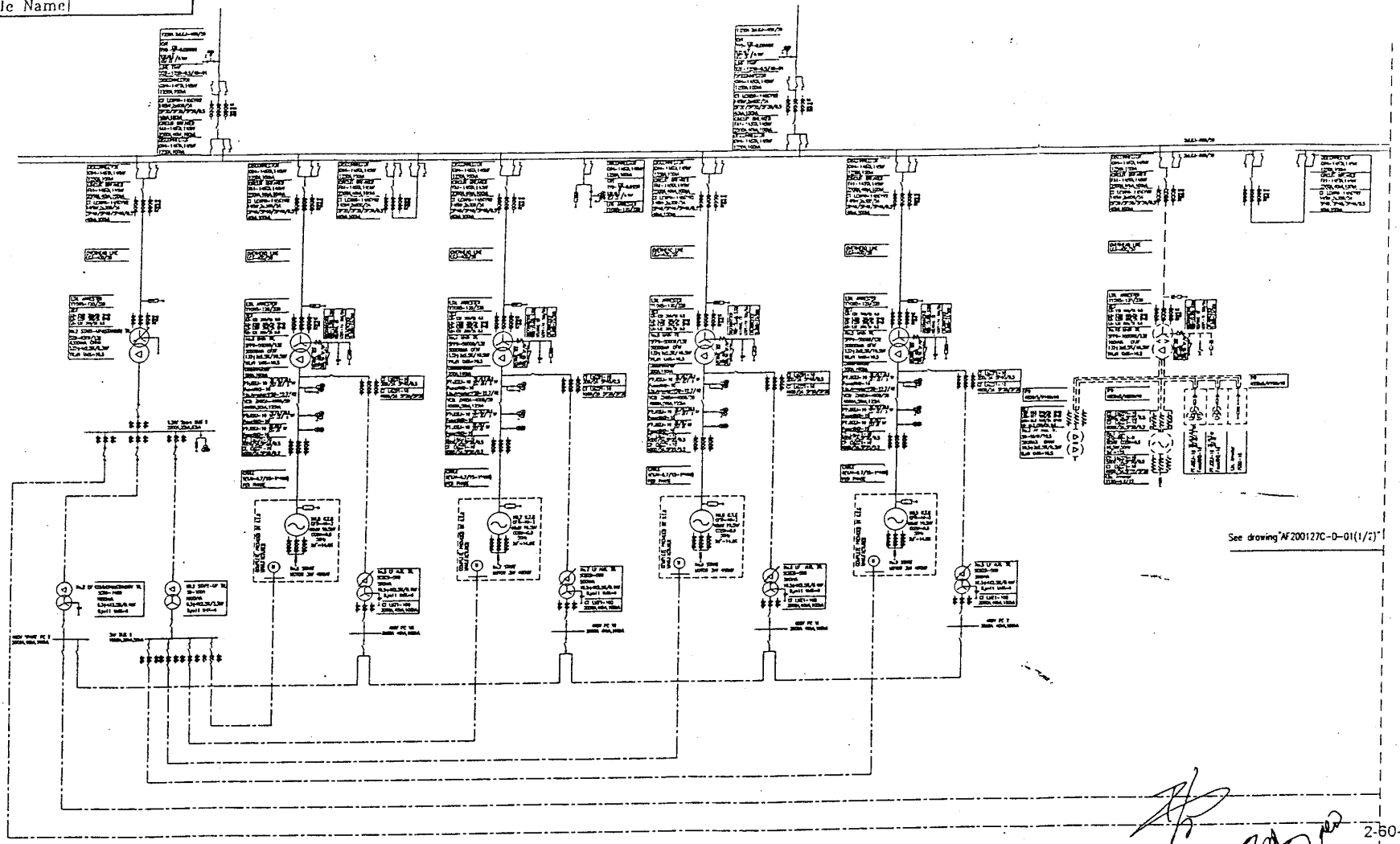

2-60-2/2

Notes:

1. The part of hidden line shall be for future spare.

CENTRAL SOUTHERN CHINA ELECTRIC POWER DESIGN INSTITUTE				GAS TURBINE POWER PLANT,NIGERIA	Proposal DESIGN STAG
CHIEF ENG		MAIN DESIGNER		ELECTRIC KEY ONE LINE DIAGRAM(2/2)	
CHIEF DESIGN ENG		CHECKER			
CHIEF ENG OF DEPT		DESIGNER			
SECTION HEAD		DRAUGHTSMAN		DWG No	AF200127C-D-01(2/2)
DATE		SCALE			

CSEPDI

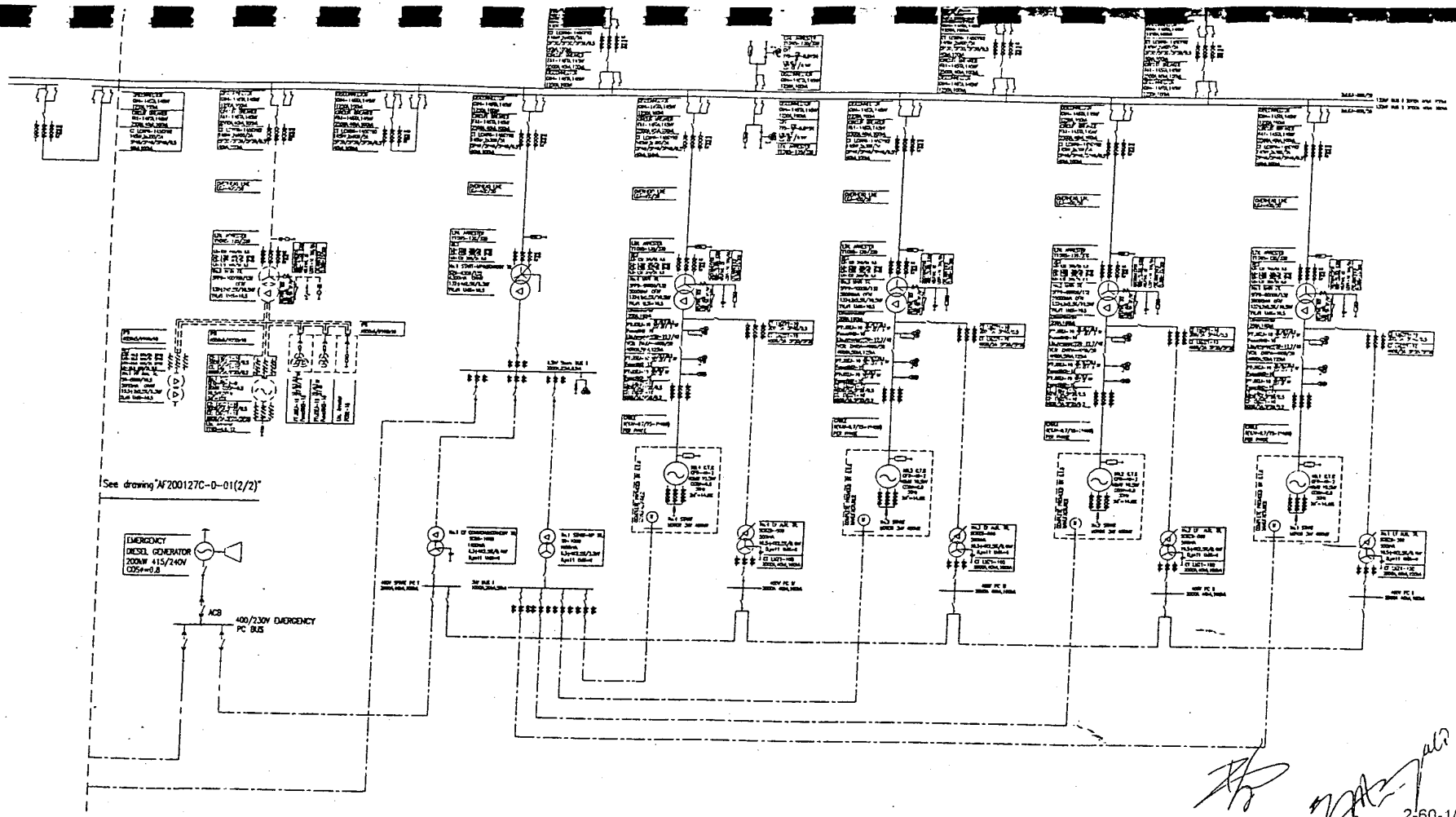

2-60-1/2

Notes:

1. The part of hidden line shall be for future spare.

CENTRAL SOUTHERN CHINA ELECTRIC POWER DESIGN INSTITUTE				GAS TURBINE POWER PLANT,NIGERIA	Proposal DESIGN STAGE
CHIEF ENG		MAIN DESIGNER		ELECTRIC KEY ONE LINE DIAGRAM(1/2)	
CHIEF DESIGN ENG		CHECKER			
CHIEF ENG OF DEPT		DESIGNER			
SECTION HEAD		DRAUGHTSMAN			
DATE		SCALE		DWG No	AF200127C-D-01(1/2)

CSEPDI
KUNMING CHINA
DO NOT REMOVE
WATERMARK

29/X40 | 1 | 2 | 3 | 4 | 5 | 6

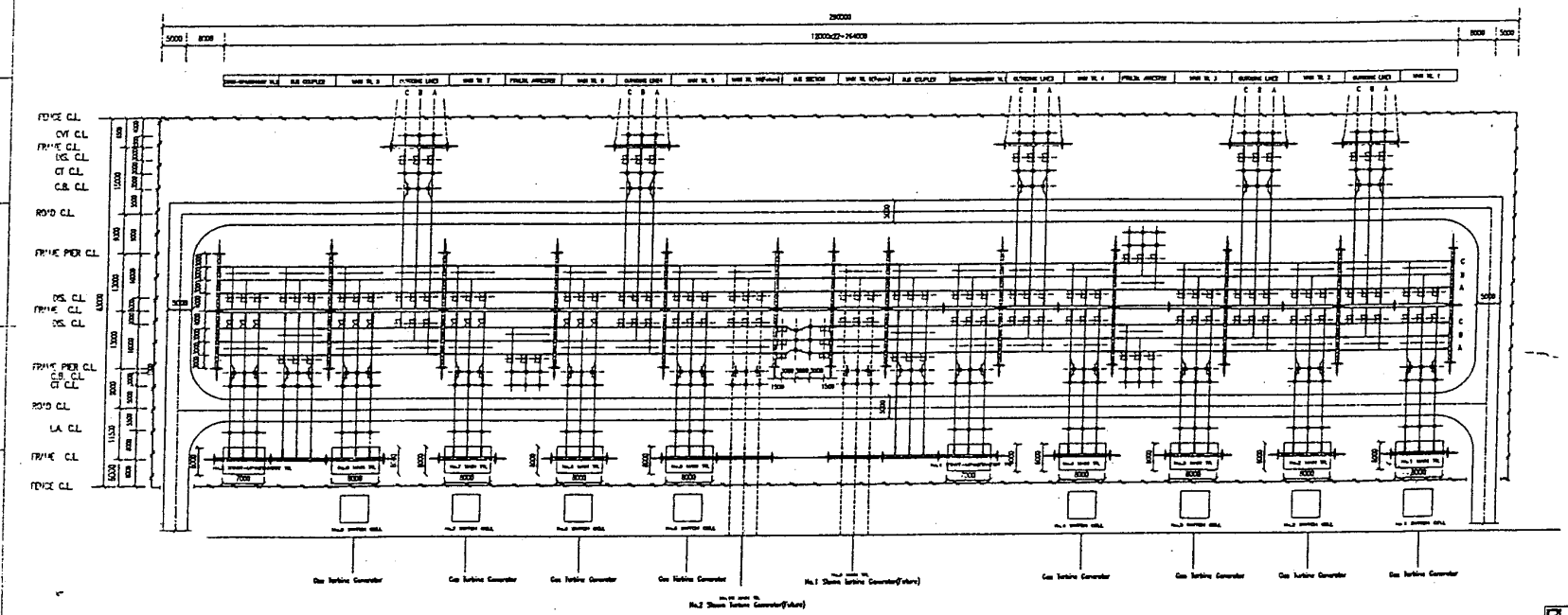

Drawing North

LEGEND:

1. CIRCUIT BREAKER(C.B.)
2. CT
3. DISCONNECTOR(DIS.)
4. CVT
5. LIGHTNING ARRESTER(L.A)
6. LINE TRAP
7. POST INSULATOR

Notes:
1. The part of hidden line shall be for future space

CENTRAL SOUTHERN CHINA ELECTRIC POWER DESIGN INSTITUTE

GAS TURBINE POWER PLANT WITH

132kV SWITCHGEAR LAYOUT

DWG No.

SCALE 1:400

DATE

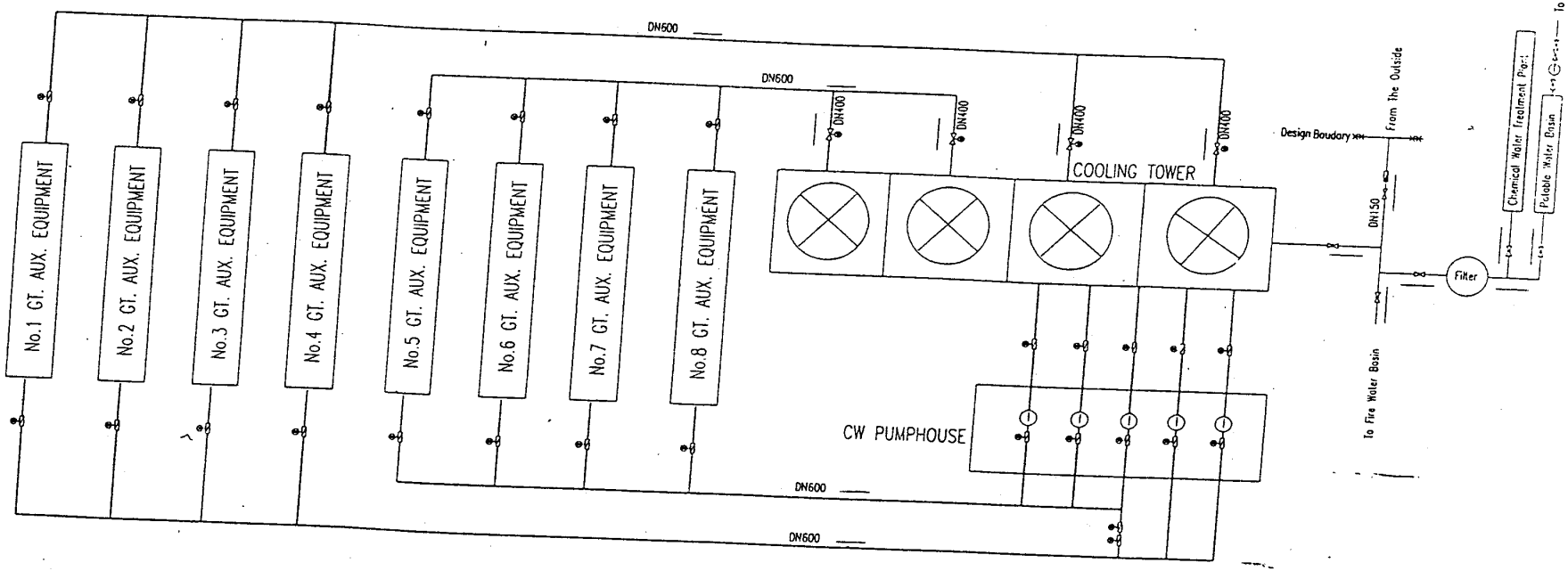

LEGEND

Legend	Name	Legend	Name	Legend	Name
	Condenser		Plate Screen		Check Valve
	Pump		Electric Butterfly Valve		Piping Cross
	Electric Gate Valve		Butterfly valve		Piping Connection
	Gate Valve		Sponge Ball Collection Device		C.W. Inlet or Outlet Piping
	Steel Gate		Cooling Tower		Flow meter
	Condenser air extraction seal water heat exchangers				Closee cycle cooling water heat exchanger

Note:
The unit of piping diameter is mm.

CENTRAL SOUTHERN CHINA ELECTRIC POWER DESIGN INSTITUTE		Gas Turbine Power Plant, Nigeria	Building DESIGN STAGE
CHIEF ENG	MAIN DESIGNER	Diagram of Water Supply System	
CHIEF DESIGN ENG	CHECKER		
CHIEF ENG OF MECH	DESIGNER		
SECTION HEAD	DRAUGHTSMAN		
DATE	SCALE	DWG No	AF200127C-S-01

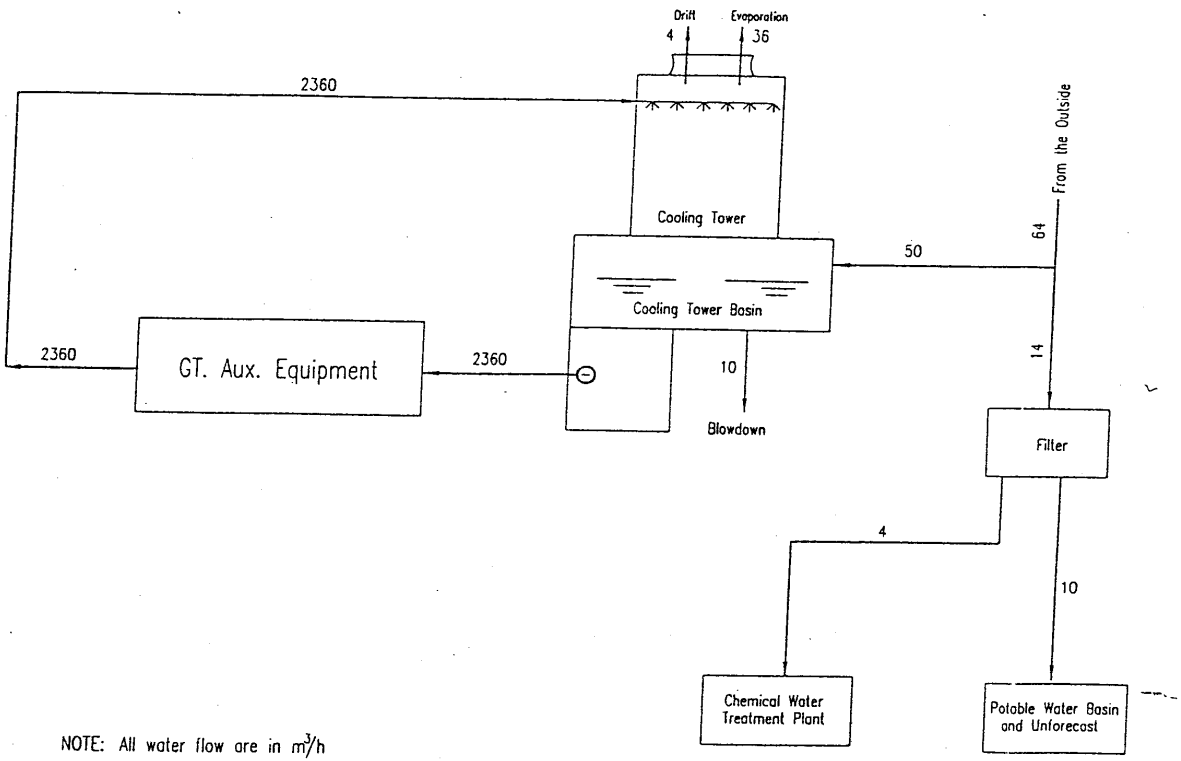

NOTE: All water flow are in m^3/h

CENTRAL SOUTHERN CHINA ELECTRIC POWER DESIGN INSTITUTE		Gas Turbine Power Plant, Nigeria	Bidding DESIGN STAGE
CHIEF ENG		MAIN DESIGNER	
CHIEF DESIGN ENG		CHECKER	Water Balance
CHIEF ENG OF DEPT		DESIGNER	
SECTION HEAD		DRAUGHTSMAN	
DATE		SCALE	DWG No AF2CC127C-S-02

CSEPDI WUHAN CHINA DO NOT AMEND VARIALLY

297X420

All Rights Reserved

File Name

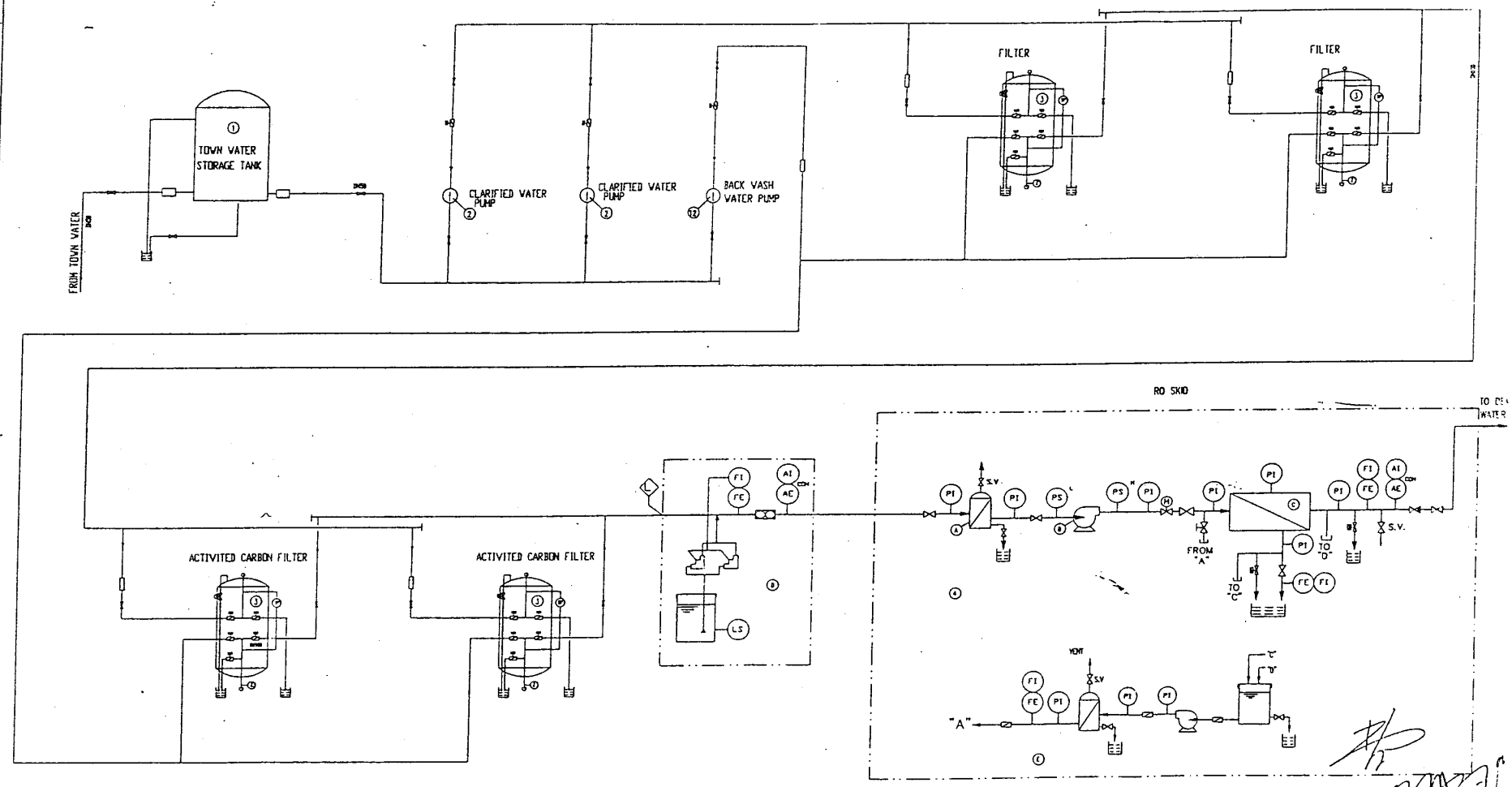

CENTRAL SOUTHERN CHINA ELECTRIC POWER DESIGN INSTITUTE

GAS TURBINE POWER PLANT, NIGERIA

DESIGN STAGE

CHIEF ENG
CHIEF DESIGN ENG
CHIEF ENG @ INST
SECTION HEAD
MAIN DESIGNER
CHECKER

MAKE-UP WATER TREATMENT SYSTEM

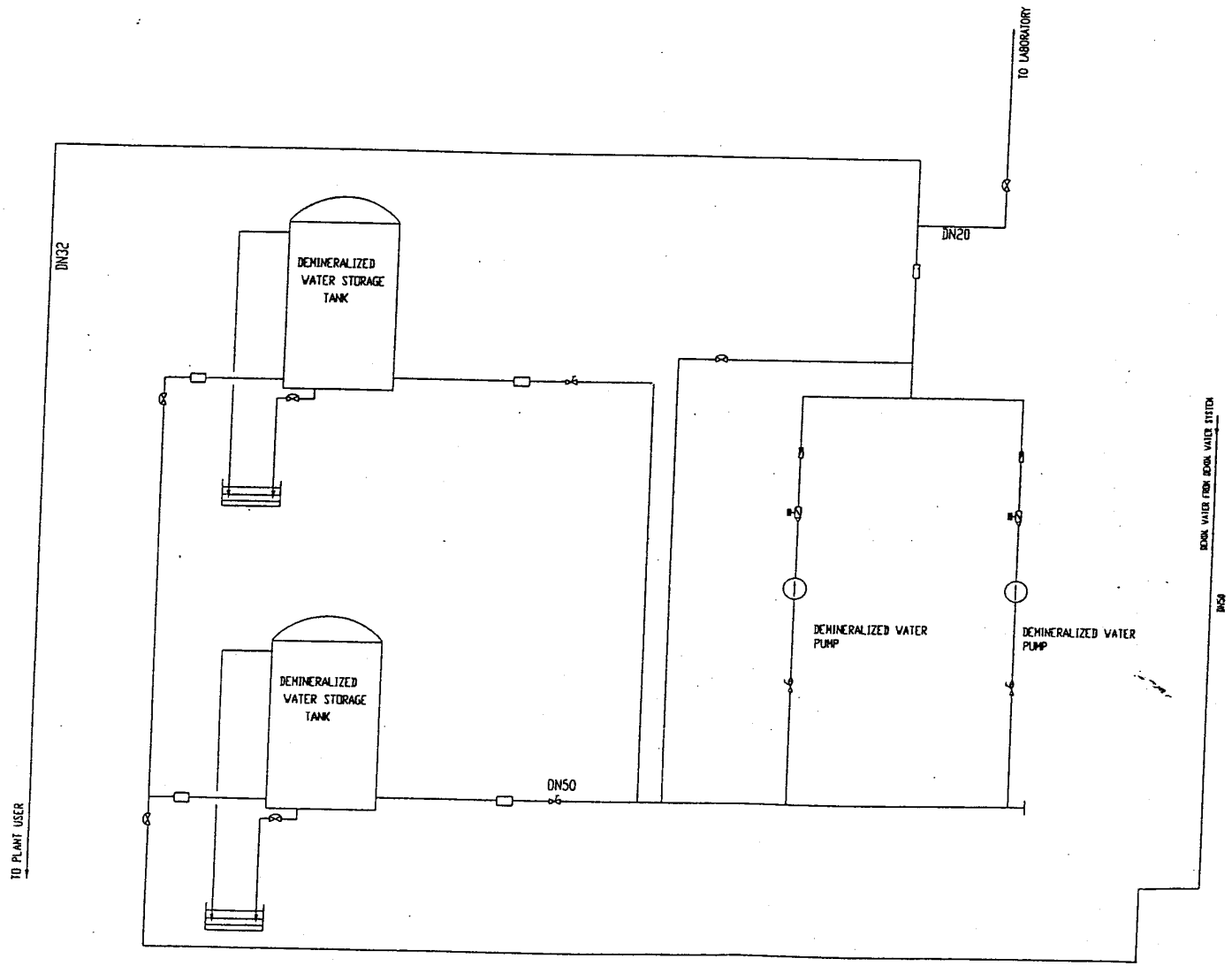

CENTRAL SOUTHERN CHINA ELECTRIC POWER DESIGN INSTITUTE

CAS TURBINE POWER PLANT, NIGERIA

DESIGN STAGE

CHIEF ENG

CHIEF DESIGN ENG

CHIEF ENG OF MPT

SECTION HEAD

MAIN DESIGNER

CHECKER

DESIGNER

DRAUGHTSMAN

DEMINERALIZED WATER STORAGE SYSTEM

APPENDIX 4 – MAIN EQUIPMENT LIST

single cycle gas turbine power plant – 335MW

code no.	description	page
1.01-1.18	mechanical	2.67
2.01-2.148	electrical and power substation	2.69
3.01-3.26	instrumentation and control	2.74
4.01-4.27	fresh water supply	2.75
5.01-5.28	chemical water treatment	2.76
6.01-6.37	fire fighting	2.77
7.01-7.15	ventilation & air conditioning	2.79
8.01-8.46	inplant telecommunication	2.80
9.01-9.31	repairing workshop	2.82

please note that the model, type and specification of the machinery and equipment are subject to change as per latest technology and material without prior notice to Buyers and Employers provided the quality, workmanship and performance are better than existing one stipulated hereunder and the equipment materials listed herewith are subject to final detailed design.

1.00 MECHANICAL

code	name, model, type & specification	quantity		
	Gas turbine & generator unit			
1.01	Gas turbine & generator & bypass stack, GE design model PG6581B, rated 42.10MW comprising the following ancillary and accessories:	8 set		
	(a). Air cooled generator			
	(b) Generator circuit breaker			
	(c). Isolated phase bus ducts			
	(d). Generator transformer			
	(e) Tariff metering (main and check) for generator and generator auxiliaries			
	(f) Gas fuel system			
	(g). Nitrogen purging systems			
	(h) Lubricating oil system including plate type lubricating oil coolers, purifiers, tank and demister			
	(i). Turning gear			
	(j) Starting device with all auxiliaries and controls			
	(k) Batteries and battery chargers			
	(l) Turbine generator controls or local and remote operation			
	(m) Equivalent vibration detection and protection system			
	(n) Air inlet housing, self-cleaning filtration and inlet ductwork			
	(o). Exhaust ductwork			
	(p) Bypass stack			
	(g) Bypass damper including isolation plate			
	(r) Inlet and exhaust noise attenuation, expansion pieces			
	(s) Building and enclosure ventilation			
	(t). Fire protection and detection			
	(u). Compressor off/online washing system			
	(v). Electrical systems			
	(w). Unit and station transformers			
	(x). Thermal insulation and acoustic treatment			
1.02	Unit gas scrubber vertical V-cone	8 set		
1.03	Unit gas flow meter	8 set		
	Auxiliaries - natural gas station			
1.04	Natural gas treatment skid	1 set		
1.05	Station gas scrubber vertical	2 set		
1.06	Gas flow meter V-cone	2 set		
1.07	Gas/water heated exchanger shell & tube	2 set		
1.08	Hot water boiler & accessories	1 set		

1.00 MECHANICAL

code	name, model, type & specification	quantity		
	Auxiliaries – balance of plant (BOP)			
1.09	Air compressor & motor $20m^3$/min, 0.75Mpa	2set		
1.10	Air receiver $20m^3$	1set		
1.11	Air receiver $2m^3$	1set		
1.12	Instrument air dual tower dryer $20m^3$/min	1set		
1.13	Instrument air dryer, after filter $20m^3$/min	2set		
1.14	Instrument air dryer, prefilter $20m^3$/min	2set		
1.15	Pipe and accessory	110ton		
1.16	Insulation, rock cotton	$160m^2$		
1.17	Lagging, aluminium plate, thickness 2mm	$320m^2$		
1.18	Paint	1,200kg		

2.00 ELECTRICAL AND POWER SUBSTATION

code	name, model, type & specification	quantity		
	G.T. generator circuit system			
	MV switchgear panel KYN-10			
2.01	Circuit-breaker panel including VCB: ZN65A-4000/50,4000A,50kA	8set		
2.02	PT panel including PT: 3(JDZJ-10, (11.5/1.732)/(0.1/1.732) /(0.1/3)kV) and 3(RN2-10,10kV,0.5A)	8set		
2.03	PT panel including PT: 3(JDZJ-10, (11.5/1.732)/(0.1/1.732) kV) and 3(RN2-10,10kV,0.5A)	8set		
2.04	PT panel including PT: 3(JDZJ-10,(11.5/1.732)/(0.1/1.732)kV), 3(RN2-10,10kV,0.5A), and lightning arrester :3(Y5W-12.7/42)	8set		
2.05	Power incoming panel including CT: 3(LMZD1-10,4000/5A,5P20/0.5), 3(LMZD1-10,4000/5A, 5P20/0.2)	8set		
2.06	Power feeding panel including CT: 3(LMZB1-10,200/5A,5P40/0.5), 3(LMZD1-10,4000/5A,5P20/5P20)	8set		
2.07	Disconnector panel including disconnector: 200A,160kA	8set		
	Power transformer			
2.08	Main transformer SFP9-50000/132,50MVA, OFAF, off load tap-changing 132±2×2.5%/10.5kV,YN,d1, Ud%=10.5	8set		
2.09	Start-up & standby transformers SZ9-6300/10.5, 6.3MVA,ONAN, on load tap-changing 132±4×2.5%/6.3kV, YN,d1, Ud%=10.5	2set		
2.10	Start-up transformer:S9-1000/6.3,1MVA, ONAN, off load tap-changing 6.3±2×2.5%/3.3kV,D,yn11, Ud%=6	2set		
2.11	.Neutral CT: LCW1-10 300/5A 10P15	8set		
2.12	Neutral earthing switch:GW5-72.5TA, 72.5KV,630A, with CS17 operating mechanism	8set		
2.13	Neutral lightning arrester:Y1.5W5-73/200	8set		
	132kV outdoor switchgear			
2.14	SF6 circuit breaker:FA1-145TA 132kV, 2500A, 40kA,three-phase	18set		
2.15	Disconnector:GW4-145TA, 132kV, 1250A, 100kA, 40kA(3s), single earthed.	18set		
2.16	Disconnector:GW4-145TA, 132kV, 1250A,100kA, 40kA(3s),double earthed.	11set		
2.17	Disconnector:132kV,1250A,100kA,40kA(3s), unearthed.	15set		
2.18	CT:LCWB6-145GYW2, 132kV, 40kA(1s), 2x600/5A, 5P30/5P30/5P30/0.5	24set		
2.19	CT:LCWB6-145GYW2, 132kV, 40kA(1s),:2x300/5A, 5P40/5P40/5P40/0.5	30set		

2.00 ELECTRICAL AND POWER SUBSTATION

code	name, model, type & specification	quantity		
2.20	Capacitor voltage transformer for bus TYD-$\frac{132}{\sqrt{3}}$-0.015H, 132kV, $\frac{132}{\sqrt{3}}/\frac{0.1}{\sqrt{3}}$/0.1kV	9set		
2.21	Capacitor voltage transformer for trans. line TYD-$\frac{132}{\sqrt{3}}$-0.0066H, 132kV, $\frac{132}{\sqrt{3}}/\frac{0.1}{\sqrt{3}}$/0.1kV	15set		
2.22	Zno lightning arrester:Y10W5-120/320	39set		
2.23	Post insulator:ZSW-145/10	46set		
2.24	Stranded aluminium wire steel :LGJ—400/50	7,000meter		
	Over-head line connectors			
2.25	Strain clamps:NY-400/50, NY-300/50	500set		
2.26	T-connector:TY-400/50	20 set		
2.27	T-connector:TY-300/50	120set		
2.28	T-connector:TL-400	20set		
2.29	T-connector for double wire:TYS-2X400/200	80set		
2.30	Supports for single wire:MDG-5	20set		
2.31	Supports for double wire:MSG-5	16set		
2.32	Spacers for double wire:MRJ-5/200	900set		
2.33	Spacers for double wire MRJ-6/200	500set		
	Equipment connectors			
2.34	Compression connectors:SY-300/50A(125x125)	100set		
2.35	Compression connectors:SY-300/50B(125x125)	50set		
2.36	Compression connectors:SY-300/50C(125x125)	60set		
2.37	Compression connectors:SSY-300/200A(125x125)	30set		
2.38	Compression connectors:SSY-300/200B(125x125)	30set		
2.39	Compression connectors:SSY-300/200C(125x125)	40set		
2.40	AL-CU transition connector:SYG-300/50A	110set		
2.41	AL-CU transition connectors:SYG-300/50B	60set		
2.42	AL-CU transition connectors:SYG-300/50	50set		
2.43	AL-CU transition connectors:SSYG-300A/200	110set		
2.44	AL-CU transition connectors:SSYG-300B/200	70set		
2.45	AL-CU transition connectors:SSYG-300C/200	30set		
2.46	Isolators:XWP2-100	3,500pcs		
	Auxiliary power system			
2.47	6.3kV switchgear panel:KYN1-10,draw-out type, 25kA, 2000A,with vacuum breakers	16set		
2.48	6.3kV switchgear panel :KYN1-10, draw-out type, with PT&LA	2set		
2.49	6.6kV switchgear bus duct:31.5kA, 2000A,	20meter		
2.50	LV aux. transformer:SCB8-1600/10，1600kVA，dry type with shell ，off-LTC 6.3±2×2.5%/0.4kV，D,yn11,Ud%=6	2set		
2.51	SCBZ8-500/10，500kVA，dry type with shell ，OLTC 10.5±2×2.5%/0.4kV，D,yn11,Ud%=6	8set		

2.00 ELECTRICAL AND POWER SUBSTATION

code	name, model, type & specification	quantity		
2.52	400V PC panel: GCS draw-out type , 3200A, 40kA,100kA	110set		
2.53	400V Bus duct 3200A,40kA	20meter		
2.54	400V MCC panel: GCS draw-out type, 1800A , 1k25kA,63kA	90set		
2.55	Distribution box:SA-4 type with C45AD ACB 3P	150set		
2.56	Maintenance box:JFCR-14	16set		
2.57	Maintenance box:JFCR-13	20set		
2.58	Maintenance box:JFCR-13(outdoor type)	8set		
	Lighting fixture			
2.59	High-efficiency lighting group	90pcs		
2.60	High-efficiency fluorescent lamp:GDYG72-3×40W	500set		
2.61	Wall lamp:DLB422 40W	160set		
2.62	Industry &mine lamp:GGY125W+NG×150W	50set		
2.63	Industry &mine lamp:GGY80W+NG×150W	12set		
2.64	Explosion-proof : Gde-160F1 125W	15set		
2.65	Three protection lamp:GDJ358WF1-200W	20set		
2.66	Non-explosive road lamp:GDJe93-250 NG250W	8set		
2.67	Damp-proof lamp:DLG6 AC 220V 60W	16set		
2.68	Lighting lamp:GDTG67-2 NGX400W	8set		
2.69	Three protection lamp:GDJ359WF1-GGY125W	60set		
2.70	Road lamp	40set		
2.71	AC working lighting box:XRM1-109/3	40pcs		
2.72	AC photo-cell lighting box	8pcs		
2.73	Emergency illuminate auto working box:DLST3/110	4pcs		
2.74	Four way single control switch E34/1/2A	150pcs		
2.75	Socket: E2015 13A as BS standard	200pcs		
2.76	Waterproof socket according to BS	20pcs		
2.77	Socket box:XRZ1-11011/0	5pcs		
2.78	Cable:VV22-4X6	4,000meter		
2.79	Electric wire:BV-1×2.5	15,000meter		
2.80	Soft wire:BVR—2x1	4,000meter		
2.81	Electric protection tube: PVC Φ20	6,000meter		
2.82	Electric protection tube: PVC Φ50	2,500meter		
2.83	Connection box: used for PVC pipe Φ20	250piece		
	Crane sliding Wire			
2.84	Sliding wire:WH-L80, 80A	80meter		
2.85	Sliding wire:WH-L200, 200A	200meter		
	Cable and accessories			
2.86	MV power cable::YJV-8.7/15-1*400	6,000meter		
2.87	MV power cable:YJV-6/6-3*120	1000meter		
2.88	MV power cable:YJV-6/6-3*185	4,500meter		
2.89	LV power cable	55km		
2.90	Control cable	110km		
2.91	Steel pipe: ϕ25,hot galvanized	1400meter		
2.92	Steel pipe: ϕ32,hot galvanized	5,000meter		
2.93	Steel pipe: ϕ40,hot galvanized	500meter		

2.00 ELECTRICAL AND POWER SUBSTATION

code	name, model, type & specification	quantity		
2.94	Steel pipe: ϕ 50,hot galvanized	1,000meter		
2.95	Steel pipe: ϕ 70,hot galvanized	200meter		
2.96	Steel pipe: ϕ 80,hot galvanized	200meter		
2.97	PVC pipe: ϕ 100	100meter		
2.98	Angle steel:40x40x4mm,hot galvanized	4,500meter		
2.99	Angle steel:30x30x4mm,hot galvanized	8,000meter		
2.100	Cable trays、supports and arms	70ton		
2.101	Fire-protection cable trays	8ton		
2.102	Fire-proof pillow	10,000pcs		
2.103	Refractory paint	2,500kg		
2.104	Refractory seals: FS	2,000kg		
2.105	Refractory plate: WJ	$40m^2$		
2.106	Foam thermal insulating plate	$15m^3$		
	Earthing material			
2.107	Copper stranded wire: TJR S=$185mm^2$	15,000meter		
2.108	Copper rod: ϕ 25	2,000meter		
2.109	PVC pipe: ϕ 40	300meter		
2.110	Tectowel mold & welding powder	240set		
	Gas turbine generator circuit system			
	Gas turbine DC system,			
2.111	Gas turbine DC system, Supplied by the GT manufacturer	8set		
	Station DC system			
2.124	Battery, lead-acid type: 110V, 400AH	1set		
2.125	Battery charger (rectifier type), rectifier type: 160A/115V	1set		
2.126	DC power incoming panel including insulation detection device, cabinet type: 800 (width) × 600 (depth) × 2260 (height)	1each		
2.127	DC feeder panel, cabinet type: 800 (width) × 600 (depth) × 2260 (height)	2each		
2.128	Emergency lighting change-over box JX(F)	1each		
	Uninterruptible power system			
2.129	Static inverter type 15kVA, include AC feeder panel	1set		
	Control and protection equipment			
2.130	Computer control system Including operation workstation, engineering workstation, remote terminal workstation, I/O system, network equipment etc.	1set		
2.131	GT main transformer and HV auxiliary transformer protection, microprocessor type: cabinet type:800 (width) × 600 (depth) × 2260 (height), 1 panel/set	8 set		

2.00 ELECTRICAL AND POWER SUBSTATION

code	name, model, type & specification	quantity		
2.132	Start-up and standby transformer protection microprocessor type: cabinet type: 800 (width) × 600 (depth) × 2260 (height), 1 panel/set	2 Set		
2.133	Unit kWh/KVarh panel cabinet type: 800 (width) × 600 (depth) × 2260 (height)	2 Panel		
2.134	132kV line protection microprocessor type: Cabinet type: 800 (width) × 600 (depth) × 2260 (height), 1 panel/set	5 set		
2.135	132kV bus protection, microprocessor type: Cabinet type:800 (width) × 600 (depth) × 2260 (height), 1 panel/set	1 set		
2.136	132kV line kWh/kvarh panel, cabinet type: 800 (width) × 600 (depth) × 2260 (height)	2 panel		
2.137	Auxiliary relay panel, cabinet type: 800 (width) × 600 (depth) × 2260 (height)	4 panel		
2.138	Synchronization device, microprocessor type	2 set		
2.139	Digital fault recorder system, microprocessor type, 1 panel/set	1 set		
2.140	Test power supply panel, cabinet type: 800 (width) × 600(depth) × 2260 (height)	1 set		
	Fire detection and alarm system			
2.141	Fire detection and alarm system	1 set		
	Other equipment			
2.142	Control box, JX(F)	20 pcs		
2.143	Interlock box, JX(F)	20 pcs		
2.144	Terminal box, XDW1	16 pcs		
2.145	Local control station	50 pcs		
2.146	Auxiliary workshop control panel, cabinet type: 800 (width) × 600 (depth) × 2260 (height)	2 set		
	Steam turbine generator excitation system			
2.147	Steam turbine generator excitation system, provided together with generator	1 set		
	Emergency generator			
2.148	Diesel generator set, 200 kW, 400/230 V, cosø=0.8 (logging), 50 Hz, 1500 rpm,	1 unit		
2.				

3.00 INSTRUMENTATION & CONTROL

code	name, model, type & specification	quantity		
	Control system			
3.01	Mark V, provided by GT suppliers	8 set		
3.02	Natural gas treatment system, programmable logic control (PLC), including operator station and printer	1 set		
3.03	Demineralized water and chemical dosing system, programmable logic control (PLC), including local control instrumentation and device	1 set		
	Control panel, console, casing for natural gas system, oil pump house, and circulating water system			
3.04	Relay cabinet	1 set		
3.05	I&C power distribution cabinet	2 set		
3.06	Local control panel	2 set		
	Local instruments & equipments for natural gas system, oil pump house, and circulating water system			
3.07	Pressure gauge.	75 set		
3.08	Pressure transmitter, smart type	20 set		
3.09	Pressure/differential pressure switch	55 set		
3.10	Resistance temperature defect (RTD)	20 set		
3.11	Bimetallic thermometer	30 set		
3.12	Temperature switch	15 set		
3.13	Level switch	30 set		
3.14	Level transmitter	4 set		
3.15	Flow-meter	20 set		
	Installation material for I&C for natural gas system, oil pump house, and circulating water system			
3.16	Computer cable	2 Km		
3.17	Control cable	30 Km		
3.18	Seamless steel piping	600 m		
3.19	Stainless steel tubing	1,600 m		
3.20	Copper tubing	1,000 m		
3.21	Stop valve	400 set		
3.22	Junction box	10 set		
3.23	Air distribution box	10 set		
3.24	Connector	600 set		
3.25	Cable protection pipe	800 m		
3.26	Metal hose	400 m		
2.				

4.0 FRESH WATER SUPPLY

Code	Name, Model, Type & Specification	Quantity		
	Cooling water system			
4.01	C.W. pump with motor Q=590m^3/h H=20m N=60kw	5 set		
4.02	Electric butterfly valve, DN400	5 pcs		
4.03	Electric butterfly valve, DN400	4 pcs		
4.04	Rubber joint, DN400	5 pcs		
4.05	Plate screen, 3000×3000mm	2 pcs		
4.06	Drainage pump with motor, Q=100t/h, H=20m	2 set		
4.07	Double girder overhead travelling crane with hoist, 5T, L10m, Height 15m	1 set		
4.08	Electric hoist, 5t, 15m	1 pcs		
4.09	C.W. pipe, DN600	800 M		
4.10	Cooling towers, Q=2,360t/h, including 4 fans	1 set		
	Make-up water system			
4.11	Water meter, DN150	1 set		
4.12	Butterfly valve, DN150	8 pcs		
4.13	Check valve, DN150	1 pcs		
4.14	Make-up water pipe, DN150	200 m		
	Potable water system			
4.15	Filter, φ1600	2 set		
4.16	Butterfly valve, DN100	10 pcs		
4.17	Floating valve, DN100	2 pcs		
4.18	Chlorination	1 set		
4.19	Potable water pipe, DN100	750 m		
4.20	Automatic water supplier, Q=15t/h H=30m	1 set		
	Sewage water system			
4.21	Sewage water treatment facility, Q=5t/h	2 set		
4.22	Sewage water pump, Q=5t/h H=10m	2 set		
4.23	Butterfly valve, DN100	6 pcs		
4.24	Check valve, DN100	2 pcs		
4.25	Sewage pipe, φ200	800 m		
4.26	Steel pipe, DN100	100 m		
	Rainwater system			
4.27	Rainwater pipe, φ500	1,200 m		

2.

5.00 CHEMICAL WATER TREATMENT

code	name, model, type & specification	quantity		
	Make-up water treatment system			
5.01	Reverse osmosis (RO) device Q=4m^3/h including:	1 set		
5.02	Safety filter, DN250mm	1 set		
5.03	RO skid, Q=4m^3/h	1 set		
5.04	Filter, DN1000mm	2 set		
5.05	Activated carbon filter, DN1000mm carbon steel rubber lined	2 set		
5.06	High pressure pump, Q=6t/h P= 144mH_2O, motor 7.5kw	1 set		
5.07	Chemical feed skid	3 set		
5.08	RO cleaning skid	1 set		
5.09	Clarified water pump, IS50-32-160 Q=7.5t/h P=34mH_2O motor 3kw	2 set		
5.10	Demineralized water tank, V=400m^3	2 set		
5.11	Demineralized water pump, IH50-32-200 Q=7.5-15 m^3/h P=51.8-48 mH_2O motor 5.5kw	2 set		
5.12	Clarified water tank, V=50 m^3	1 set		
5.13	Compressor air tank, V=6 m^3	2 set		
5.14	Pipes, valve and accessories	1 set		
	Laboratory			
5.15	Electrical-photo analytical balance, TG328G Max. wt. 200g, scale division: 0.1mg	2 set		
5.16	Analytical balance, TG628A Max. wt. 200g, scale division: 1mg	1 set		
5.17	Sodium ion meter, DWS-B2	2 set		
5.18	Conductivity meter, DDS-304	3 set		
5.19	Acidic meter, pHS-2	2 set		
5.20	Universal ion meter, PXJ-1C	1 set		
5.21	Spectrophotometer, 751TGW	1 set		
5.22	Turbidity meter, WGZ-100	1 set		
5.23	Portable digital conductor meter, DDB-303	1 set		
5.25	Refrigerator, 180L	1 set		
5.26	Agate mortar, 10cm and 13cm, one each	2 set		
	Chemical feed system			
5.27	Solution tank V=0.5m3	2 set		
5.28	Feed pump Q=10L/h, P=5bar	2 set		

2.

6.00 FIRE FIGHTING

code	name, model, type & specification	quantity		2.....
	Equipment			
6.01	Motor driven fire pump, XBD8/50 Q=50 L/S, H=80m, N=75kW	2 set		
6.02	Diesel driven fire pump, XBC8/100 Q=100 L/S, H=80m, N=161kW	1 set		
6.03	Jock pump unit with bladder tank Q=18 m^3/h, H=80m, N=22kW	1 unit		
6.04	Bladder tank, V=1 m^3	1 set		
6.05	Low Pressure CO_2 extinguishing equipment	1 unit		
6.06	CO_2 vessel, W=3 ton	1 set		
6.07	Refrigerator unit with control cabinet N=3.06-3.6 kW	1 set		
6.08	Foam dry powder combined-use fire engine, SJD5140GXFPPGF50ZD agent total quantity 4.5 ton pump: Q=40L/s, H=100m	1 set		
6.09	Lift, W=3 ton	1 set		
	Material			
6.10	Welded steel pipe, ϕ325x8	70 m		
6.11	Welded steel pipe, ϕ273x7	150 m		
6.12	Welded steel pipe, ϕ219x6	3000 m		
6.13	Galvanized steel pipe, ϕ159x4.5	300 m		
6.14	Galvanized steel pipe, ϕ108x4	300 m		
6.15	Galvanized steel pipe, ϕ89x4	1,000 m		
6.16	Gate valve, ϕ75.5x3.75	80 m		
6.17	Gate valve, Z41H-16, DN300	3 pcs.		
6.18	Gate valve, Z41H-16, DN250	10 pcs.		
6.19	Gate valve, Z41H-16 DN100	15 pcs.		
6.20	Check valve, HH44T-16 DN250	3 pcs.		
6.21	Check valve, HH44T-16 DN50	1 pcs.		
6.22	Safety valve, DN250	1 pcs.		
6.23	Butterfly valve, D371X-10, DN200, PN1.6	10 pcs.		
6.24	Butterfly valve, D371X-10, DN150, PN1.6	10 pcs.		
6.25	Butterfly valve, D71X-10, DN100 PN1.6	5 pcs.		
6.26	Outdoor fire hydrant, SS100-16, Pg=1.6MPa	30 pcs.		
6.27	Cabinet, L800xW240xH1200 Including DN65, 60m tape & 1 QZ19 nozzle	30 set		
6.28	Fire truck connector, SQ100-16	4 set		
6.29	Indoor fire hydrant, SN65	17 set		
6.30	Cabinet, L650xW240xH800 including DN65,60m tape & 1 QZ19 nozzle	17 set		
6.31	Deluge valve, DN100	10 pcs.		
6.32	Strainer, Y-type DN100	10 set		
6.33	Spray nozzle, DN15	400 set		
6.34	Portable fire extinguisher, phosphate powder agent 4 kg	84 pcs.		

6.00 FIRE FIGHTING

code	name, model, type & specification	quantity		2.....
6.35	Mobile fire extinguisher, phosphate powder agent 25 kg	16 pcs.		
6.36	Portable fire extinguisher, carbon dioxide agent 7 kg	150 pcs.		
6.37	Portable fire extinguisher, chemical foam agent 9 litre	8 pcs.		

7.00 VENTILATION & AIR CONDITIONING

code	name, model, type & specification	quantity		2.
7.01	Air-cooled air handling unit; WLFD150; refrigerating capacity:150kW; heating capacity: 54kW; air volume:28000m^3/h; excess pressure:500Pa; total input power:56.5kW(refrigerating)/65kW(heating); overall dimensions:4850x2160x2480mm (LxWxH); weight:3500kg	2 set		
7.02	Low-noise fan cabinet; DBF20A; air volume:2000m^3/h; air pressure:190Pa; power:0.25kW	12 set		
7.03	Low-noise fan cabinet; DBF70A; air volume:7000m^3/h; air pressure:385Pa; power:1.5kW	16 set		
7.04	Low-noise fan cabinet; DBF90A; air volume:9000m^3/h; air pressure:450Pa; power:2.2kW	9 set		
7.05	Fire-fighting low-noise fan cabinet; DBF120A; air volume:12000m^3/h; air pressure:750Pa; power:3kW	4 set		
7.06	SDS unidirectional jet fan; SDS-10-4P-6-21° ; air volume:19.6m^3/s; power:15kW; thrust:575N	45 set		
7.07	Explosion-proof type roof style axial fan; FWT-1; No.5E; air volume:4036～6313m^3/h; air pressure:97～53Pa; power:0.25kW; rotational speed:720r/min	12 set		
7.08	Roof style axial fan; FWT-1; No.6E; air volume:6974～10910m^3/h; air pressure:140～77Pa; power:0.55kW; rotational speed:720r/min	16 set		
7.09	Roof style axial fan; FWT-1; No.6S; air volume:8654~13537m^3/h; air pressure:215~118Pa; power:0.75kW; rotational speed:970r/min	16 set		
7.10	Explosion-proof type axial fan; BT35-11; No.5; α =25°; air volume:7655m^3/h; air pressure:141Pa;power:0.37kW; rotational speed:1450r/Min	1 set		
7.11	Ventilation cabinet; exhaust volume:700～1500m^3/h; resistance:49～118Pa; 3d80/220V; overall dimensions:1200x800x2100mm (LxWxH), weight:85kg	1 set		
7.12	Centrifugal fan; 4-72; No.3A; Air volume:1580m^3/h; air pressure:180Pa; C/W motor:YB802-4; power:0.75kW	1 set		
7.13	Aluminum alloy double-deck weather-proof adjustable shutter (manual); LBC-S-FT	340 m^2		
7.14	Aluminum alloy double-deck weather-proof adjustable shutter (motor-driven); LBC-D-FT	150 m^2		
7.15	Parts or accessories for ventilation and air-conditioning			

8.00 INPLANT TELECOMMUNICATION

2.

code	name, model, type & specification	quantity		
	Interplant Communication System			
8.01	PABX switchboard, 356 pairs, including 1 operator console & 1 maintenance management terminal	1 set		
8.02	Main distribution frame, 600 pairs	1 set		
8.03	HF switch power supply, unit capacity of 30A,2+1 backup	1 set		
8.04	Non-maintenance battery, 300Ah,48V	1 set		
8.05	Telephone set	200 unit		
8.06	Fee for trunk line	1 item		
	Intercommunication paging system			
8.07	Dispatching exchanger	1 set		
8.08	Control room master station	1 set		
	Station			
8.09	Indoor call station (wall station)	10 set		
8.10	Indoor call station (desk station)	10 set		
8.11	Outdoor call station (wall station)	15 set		
	Power amplifier set			
8.12	Power amplifier, 250W	1 set		
8.13	Power amplifier, 60W	1 set		
8.14	Loudspeaker set			
8.15	Loudspeaker for station	35 set		
8.16	Indoor louderspeaker, 15W	4 set		
8.17	Outdoor louderspeaker, 30W	8 set		
8.18	Transformer for station	35 unit		
8.19	Private cable,60029-103	800 m		
8.20	Private cable, HJYVPZR/SA	8,500 m		
8.21	Installation materials	1 set		
	Cable network			
8.22	Cable connecting box,XF-9,100 pairs	2 unit		
8.23	Terminal box,XKF-50,50 pairs	4 unit		
8.24	Terminal box, XKF-30, 30 pairs	5 unit		
8.25	Terminal box, XKF-20, 20 pairs	5 unit		
8.26	Terminal box, XKF-10, 10 pairs	10 unit		
8.27	Terminal box, XKF-5, 5 pairs	15 unit		
8.28	Terminal box, XFO-50, 50 pairs	1 unit		
8.29	Terminal box, XFO-30, 30 pairs	1 unit		
8.30	Terminal box, XFO-20, 20 pairs	3 unit		
8.31	Terminal box, XFO-10, 10 pairs	6 unit		
8.32	Communication cable, HYA53,100X2X0.5	2,000 m		
8.33	Communication cable, HYA53, 50X2X0.5	600 m		
8.34	Communication cable, HYA53, 30X2X0.5	600 m		

8.00 INPLANT TELECOMMUNICATION

2.

code	name, model, type & specification	quantity		
8.35	Communication cable, HYA53, 20X2X0.5	1,800 m		
8.36	Communication cable, HYA53, 10X2X0.5	2,000 m		
8.37	Communication cable, HYA53, 5X2X0.5	3,000 m		
8.38	Power cable, BVV1X10	45 m		
8.39	Power cable, BVV1X2.5	60 m		
8.40	Telephone wire, HPVV—2X0.5	5,000 m		
	PLC communication			
8.41	PLC terminal equipment, 40W single channel, local side	6 unit		
8.42	Coupling device, 800W. local side	9 lot		
8.43	Line trap, 2500A/50kA/1mH, local side	9 lot		
8.44	HF switch power equipment, unit capacity of 30A,3+1 backup	2 set		
8.45	Battery, 300AH	2 bank		
8.46	HF cable, SYV-75-9	1,500 m		

09.00 REPAIRING WORKSHOP

code	name, model, type and specification	quantity	m^3	Wt
09.01	Motor hoist, CD1-2	2 unit		
09.02	Motor hoist	1 unit		
09.03	Common lathe, model C616, Ø320x1000	1 unit		
09.04	Common lathe, model C6140, Ø400x1500	1 unit		
09.05	Common lathe, model C6140, Ø400x2000	1 unit		
09.06	Rotary drilling machine, Z3025A, 1.5 kw	1 unit		
09.07	Planer, B6030, XA6132, 1.5 kw	1 unit		
09.08	Versatile milling machine, BQ2010, 0.6 kw	1 unit		
09.09	Gantry planer, Z512, 0.5kw	1 unit		
09.10	Bench drilling machine, S3ST200, 0.5 kw	1 unit		
09.11	Bench sand wheel, 300mm, 0.75 kw	1 unit		
09.12	Vertical sand wheel, C41-75, 0.5 kw	1 unit		
09.13	Air hammer, HS5	1 unit		
09.14	Chain block, HS3	1 unit		
09.15	Chain block, HS1	1 pce		
09.16	Chain block, G72	1 pce		
09.17	Bow sawing machine, J35 - 150	1 pce		
09.18	Portable sand wheel	2 unit		
09.19	Electric welding unit	2 unit		
09.20	Gas cutting soldering unit	2 set		
09.21	Pipe thread unit	3 set		
09.22	Workshop air compressor	1 set		
09.23	Wood table disc saw table	1 unit		
09.24	Wood table planer	1 unit		
09.25	Tools accessories for above equipment	1 unit		
09.26	Hand tools	1 set		
09.27	Electric fan	1 set		
09.28	PC computer with software	3 unit		
09.29	Motor coil winder	1 set		
09.30	Power distribution panel, switchgear and cable	1 unit		
09.31	Recommended spare parts for above equipment	1 set		

Appendix 5 – Main Technical And Economical Targets – 335MW

Based on the Appendix 1 (Design Basis) and Appendix 2 (Brief Description), the power plant of a total contracted output of 335MW is designed and built to meet the following technical and economical targets from technical viewpoint, the Employer is encouraged to assess the financial feasibility for his interest and for a macro overall study:

no.	description	target
01	gas turbine total rated output MW under ISO conditions, 8 sets each 42.10MW	336.8
02	contracted output MW, total 8 sets	335 (note 1)
03	own power consumption, MW	3.4
04	power output available for external grid, MW (01-03)	333.4
05	proposed production time, hour x day per annum less service time	24 x 300 (note 2)
06	substation installed capacity, A x kV x Hz	2,000 x 132 x 50
07	natural gas heat value assumed (L.H.V), MJ/Nm^3	33.812 (note 3)
08	overall natural gas consumption, Nm^3/second as per No.07 assumption	30.96
09	overall natural gas consumption, million Nm^3/ annum as per No.07 assumption	802.4
10	natural gas consumption, Nm^3/ kW.h as per No.07 assumption	0.338
11	heat rate, KJ/kWh as per No.07 assumption	11,220
12	heat efficiency, %, gross/ net as per No. 07 assumption	31.5 / 31.2
13	fresh water consumption, m^3/hour	64
14	land dimension, hectare	11.075
15	overall building floor space, square meter	4,764
16	local production employee for 3 shifts, number	25 (note 4)
17	expatriate employee needed for 3 shifts, number	55 (note 5)
18	design build turnkey contract cost, U$ per kW	see Appendix 7/8
	completion of works	see Appendix 6
note		
1	The contracted output is 335MW irrespective of the power plant's overall rated output.	
2	It is proposed that annual service 20 days/annum, overhaul 90 days/4-year; casual breakdown service depends on operators' skill and care, 22.5 days/ annum is conservatively reserved for the plant in Nigeria.	
3	It is an assumed figure, the Employer should deliver to the Contractor the Site's gas analysis report soonest possible.	
4	Chinese trained operators, technicians.	
5	Minimum number as under the Management Contract.	

Appendix 6 – Schedule Of Construction For Single Cycle Gas Turbine Power Plant- after deposit prepayment – 335MW

The Contractor's construction work after deposit prepayment is scheduled as below under normal conditions (unit: month):

no.	work	1-3	4-6	7-9	10-12	13-15	16-18	19-21	22-24	25-27
01	final design of infrastructure and configuration									
02	manufacturing of prefabricated sheds									
03	delivery and shipping of prefabricated sheds									
04	assembly of prefabricated sheds on site									
05	manufacturing of no.1~ 8 gas turbine									
06	delivery and shipping of no.1 gas turbine									
07	erection of no.1 gas turbine on site									
08	test running, commission of no.1 gas turbine									
09	delivery and shipping of no.2 gas turbine									
10	erection of no.2 gas turbine on site									
11	test running, commission of no.2 gas turbine									
12	delivery and shipping of no.3 gas turbine									
13	erection of no.3 gas turbine on site									
14	test running, commission of no.3 gas turbine									
15	delivery and shipping of no.4 gas turbine									
16	erection of no.4 gas turbine on site									
17	test running, commission of no.4 gas turbine									
18	delivery and shipping of no.5 gas turbine									
19	erection of no.5 gas turbine on site									
20	test running, commission of no.5 gas turbine									
21	delivery and shipping of no.6gas turbine									
22	erection of no.6 gas turbine on site									
23	test running, commission of no.6 gas turbine									
24	delivery and shipping of no.7 gas turbine									
25	erection of no.7 gas turbine on site									
26	test running, commission of no.7 gas turbine									
27	delivery and shipping of no.8 gas turbine									
28	erection of no.8 gas turbine on site									
29	test running, commission of no.8 gas turbine									
30	taking over of whole Power Plant by Employer									

Notes to Appendix 6 – Schedule Of Construction	
1	The whole schedule is mainly determined by the current busy production schedule of the gas turbine equipment which would be confirmed when the Employer is ready finally.
2	Each generating set is an independent section, the Works are therefore divided into 8 sections.
3	Each section could be delivered to and taken over by the Employer and is ready for production immediately when its erection and commission is completed by the Contractor.
4	Each cycle of erection, commission of each section is maximum 4 months commencing from arrival of the gas turbine equipment at the Site while delivery and shipping from gas turbine manufactory to the Site is approx 2 months.
5	Prefabricated shed, power substation, pump station, water treatment plant, fire service and telecommunication facilities are built as a whole at one and would be completed in a very short period.
6	~~The Employer is requested to deliver the equipment and materials from the discharge port to the Site within 10 days commencing from arrival of the carrying vessels at destination at his own cost. It is advisable to unload the equipment and materials onto the trailer and have them delivered to the Site immediately without making any stopover at the wharf. The equipment is extremely heavy (heaviest package is 21 tons) that heavy duty crane and trailer are needed.~~
7	Industrial training of the Employer's personnel in China would commence after the deposit prepayment is received.

2.

Appendix 7 - Payment Schedule

For Single Cycle Gas Turbine Power Plant Under Seller's Credit Payment Terms – 335MW

unit: United States of America currency (U$)

table A. Contract price breakdown

serial	expenditure account	amount
1	design supply build turnkey project cost (see Quotation Sheet)	148,405,000
2	two years interest at 6.5% per annum on 65% of serial 1 account	12,540,222
3	export credit insurance premium - 5% on 65% of serial 1 account	4,823,163
4	two years interest of export credit insurance premium at 6.5% pa on serial 3 account	627,012
5	export credit insurance premium - 5% on 50% of serials 2 and 4	329,181
6	total contract price	166,724,578

table B. Deposit prepayment credit schedule

serial	account and payment	amount
7	total contract price	166,724,578
8	deposit prepayment:	
9	35% deposit of serial 6 account ***	(58,353,602)
10	one years interest at 6.5% pa - 50% x 65% of serial 2 account ***	(4,075,572)
11	one years interest of export credit insurance premium at 6.5% pa – 50% x 65% of serial 4 account ***	(203,779)
12	total credit amount repayable in 7 years as per table C	104,091,625
13	Note - *** the amounts of serials 9 -11 total U$62,632,953 are payable by telegraph transfer within one (1) month upon receipt of the approval of the relevant institutions and government authorities.	

table C. Repayment schedule

serial	month	instalment	credit principal	interest 6.5% pa	due amount	balance
14	25	1	7,435,116	0	7,435,116	96,656,509
15	31	2	7,435,116	3,141,337	10,576,453	89,221,393
16	37	3	7,435,116	2,899,695	10,334,811	81,786,277
17	43	4	7,435,116	2,658,054	10,093,170	74,351,161
18	49	5	7,435,116	2,416,413	9,851,529	66,916,045
19	55	6	7,435,116	2,174,771	9,609,888	59,480,929
20	61	7	7,435,116	1,933,130	9,368,246	52,045,813
21	67	8	7,435,116	1,691,489	9,126,605	44,610,696
22	73	9	7,435,116	1,449,848	8,884,964	37,175,580
23	79	10	7,435,116	1,208,206	8,643,322	29,740,464
24	85	11	7,435,116	966,565	8,401,681	22,305,348
25	91	12	7,435,116	724,924	8,160,040	14,870,232
26	97	13	7,435,116	483,283	7,918,399	7,435,117
27	103	14	7,435,117	241,641	7,676,757	0
28		total	104,091,625	21,989,356	126,080,981	

29 Notes –

(1) Grace period: twenty-four 24 months or four (4) bi-annual instalments commencing from the date after the Contract becomes effective.

(2) Repayment of principal and its interest is to be made in fourteen (14) bi-annual instalments commencing from the first week of the 25th month after the Contract becomes effective.

Appendix 7-1 – Payment Schedule – Quotation Sheet
For Single Cycle Gas Turbine Power Plant – 335MW

no.	code no.	works and supply	cost U$
01	1.01-1.18	mechanical - gas turbine	108,215,000
02	2.01-2.148	electrical and power substation	8,778,000
03	3.01-3.26	instrumentation and control	792,000
04	4.01-4.27	fresh water supply	696,000
05	5.01-5.28	chemical water treatment	864,000
06	6.01-6.37	fire fighting	183,000
07	7.01-7.15	ventilation & air conditioning	181,000
08	8.01-8.46	inplant telecommunication	273,000
09	9.01-9.31	repairing workshop	208,000
10		two years spare parts recommended	8,167,000
11		civil engineering construction materials	4,680,000
12		erection installation materials	5,604,000
13		equipment and materials FOB value (01 to 12)	138,641,000
14		seafreight estimated	1,000,000
15		C&F Nigerian main seaport (13+14)	139,641,000
16		design fee	4,000,000
17		erection commission work	2,760,000
18		civil engineering construction work	2,004,000
19		**Grand total cost (15 to 18)**	U$ 148,405,000

SAY UNITED STATES DOLLARS ONE HUNDRED FORTY-EIGHT MILLI
FOUR HUNDRED AND FIVE THOUSAND ONL

2.

notes	
1	fuel, light, water system outside site boundary is not included.
2	nos.11 and 18 only cover both prefabricated sheds and the ordinary concrete foundations for these sheds and for equipment; soil survey and soil test, ground treatment engineering including piling foundations below the ordinary concrete foundations are not included.
3	no.16 design fee covers both production technique design and architectural structural design of the infrastructure.
4	nos.17 and 18 cover labour costs + Contractor's tool, gear and equipment costs.
5	no.19 price is based on 35% deposit prepayment/ 40% payable on presentation of shipping documents/ 25% payable on completion of the Works drawn under confirmed and at sight letter of credit. For credit payment terms, other costs expenses be added.
6	sea transport and discharge port port – site road haulage insurance costs excluded.
7	discharge port disbursement costs excluded.

1.1.3 CONTRACT PRICE means the total sum named under the articles related in the Contract and referred to the Article 3 of this Contract .

1.1.4 EMPLOYER means NATIONAL ELECTRIC POWER AUTHORITY OF FEDERAL MINISTRY OF POWER AND STEEL, NIGERIA and the legal successors in title to such person, but not (except with consent of the Contractor) any assignee of such person.

1.1.5 CONTRACTOR means CHINA NATIONAL MACHINERY AND EQUIPMENT IMPORT AND EXPORT CORPORATION, CHINA and the legal successors in title to such person, but not (except with consent of the Employer) any assignee of such person.

1.1.6 EMPLOYER'S REPRESENTATIVE means the person appointed by the Employer to act as Employer's Representative for the purposes of the Contract and other person appointed from time to time by the Employer and notified as such to the Contract.

1.1.7 CONTRACTOR'S REPRESENTATIVE means the person appointed by the Contractor pursuant to the provisions of Article 15 hereof.

1.1.8 SUB-CONTRACTOR means any person named in the Contract as a subcontractor, manufacturer or supplier for a part of the Works or any person to whom a part of the Works has been subcontracted and the legal successors in title to such person, but not any assignee of any such person.

1.1.9 CONTRACTOR'S EQUIPMENT means all machinery, apparatus and other things (other than Temporary Works) required for the execution and completion of the Works and the remedying of any defects, but does not include Plant, Materials, or the things intended to form or forming part of the Permanent Works.

1.1.9 (a) EXPERT means the President of the Nigerian Society of Engineers or his appointed representative.

1.1.10 PLANT means machinery and apparatus intended to form or forming part of the Permanent Works, including the supply-only items which are to be supplied by the Contractor as specified in the Contract

1.1.11 WORKS means the Permanent Works and the Temporary Works or either of them as appropriate

1.1.12 TEMPORARY WORKS means the temporary works of every kind (other than Contractor's Equipment) required for the execution and completion of the Works and the remedying of any defects.

1.1.13 PERMANENT WORKS means the permanent works to be designed and executed in accordance with the Contract.

1.1.14 SITE means the places provided by the all Employer where the works are to be executed and to which Plant and Materials are to be delivered, and any other places as may be specifically designated in the Contract as forming part of the Site.

1.1.15 TAKING-OVER means that fabrication, construction, tests and adjustments have been completed in accordance with the requirements specified in the Contract and the Works taken over pursuant to the provisions of Article 19 hereof.

1.1.16 TIME OF COMPLETION means the time for completion of the Works as stated in the Appendix 6 (Schedule Of Construction For Single Cycle Gas Turbine Power Plant) to the Contract, including the any extended time thereto from time to time approved by the Employer

1.1.17 MONTH means calendar month according to the Gregorian Calendar

1.1.18 EFFECTIVE DATE means the date on which the Contract entered into legal force and effect

1.2 INTERPRETATION

Words importing party or parties shall include firms and corporations and any organization having capacity. Words importing the singular also include the plural and vice versa where the context requires. Words importing one gender also include the other gender.

Where the words "directed", "required", "approved", "accepted", "permitted" or similar terms are used, the "direction", "request", etc. shall be understood to mean "by the Employer".

ARTICLE 2 SCOPE OF THE CONTRACTOR'S SUPPLY

Under the Contract, the Contractor shall furnish the Works on a turn-key basis comprising both the following content and the content as described in the Works and Supply Scope of the Brief Description (Appendix 2) hereof:

2.1 Design and Technical Documentation:

The Contractor shall supply the design of all departments of the contracted single cycle gas turbine Power Plant in aspect of fuel resources, water, process of power plant and utilities, mechanical and electrical, automation and instrumentation, lighting system within the power plant boundary and design of civil engineering of power plant and the technical documents as listed in Article 8 hereof, with provisions to convert to combined cycle in future.

2.2 Equipment and Materials:

The Contractor shall supply the equipment and materials as listed in the Appendix 4 of the Contract including electrical equipment and instrument, electric wire and cable, lighting equipment within the Power Plant boundary, refractory and thermal insulate materials, and spare parts for two (2) years' normal operation.

2.3 Erection, Commissioning of Equipment and Training:

The Contractor shall be responsible for the erection, commissioning and test running of the equipment and provide training service to the Employer's personnel in China and on Site as per the provisions of Article 9 hereof.

2.4 Civil Engineering Works:

The Contractor shall supply all civil engineering construction materials and finish the civil Engineering works construction including road, building and equipment ordinary concrete foundations, stack and administration offices building within the Power Plant boundary but excluding materials and works for both (A) the Site's soil survey, soil test prior to detailed design and during construction course and (B) the ground treatment engineering including piling foundation of both building and equipment below their ordinary concrete foundations if any and if required.

2.5 Irrespective of the above terms of this Article 2, the supply and erection of the outgoing high voltage cable from the stepup transformer within the Power Plant boundary to the external grid outside and adjoining the Power Plant boundary shall be for the Employer's account.

ARTICLE 3 CONTRACT PRICE AND TERMS OF PAYMENT

As full compensation for the performance of the Works and the fulfillment of obligations of the Contractor under the Contract, the Employer shall pay to the Contractor the total Contract Price of United States Dollars One Hundred Sixty-six Million Seven Hundred Twenty-four Thousand Five Hundred and Seventy-eight only (USD166,724,578) and its relative interest as stated in Appendix 7 (Payment Schedule and its Quotation Sheet) of the Contract.

All payment of the total Contract Price shall be made in the currency of United States of America.

The Contractor shall apply for government loan for the project finance from the China Eximbank in seller's credit form.

The payment under the seller's credit terms shall be made in the following rates and manners:

3.1 For and under seller's credit payment terms
The deposit and prepayment, repayment of principal and interest under seller's credit payment terms shall be made as follows and as per Appendix 7 – Payment Schedule hereof:

3.1.1 The Employer shall pay United States Dollars Sixty-two Million Six Hundred Thirty-two Thousand Nine Hundred and Fifty-three only (USD62,632,953) to the Contractor as deposit and prepayment by telegraphic transfer within ninety (90) days upon receipt of the approval of the relevant institutions and government authorities as stated in the terms of (b) and (c) of Article 35 of this Contract against Contractor's submission of a bank guarantee undertaking to refund the deposit and prepayment together with its interest at six and half percent (6.5%) per annum in event the Contractor failed to ship, consign the Plant onboard for the Work solely because of his own fault upon receipt of the letter of credit and repayment guarantee, insurance policy certificate as stated in terms 3.1.2 and 3.6 hereof whereas delay of the shipment and partial shipments shall not be deemed as the Contractor's own failure.

3.1.2 The remaining of the total Contract Price, namely United States Dollars One Hundred and Four Million Ninety-one Thousand Six Hundred and Twenty-five Only (USD104,091,625) shall be paid under credit terms. The Employer shall within thirty (30) days after making the deposit and prepayment as stipulated in terms 3.1.1 hereof establish an irrevocable without recourse usance letter of credit by Central Bank of Nigeria accompany with an irrevocable repayment guarantee issued by the Federal Ministry of Finance of Federal Republic of Nigeria in favour of the Contractor for the amount of United States Dollars One Hundred Twenty-six Million Eighty Thousand Nine Hundred and Eighty-one only (USD126,080,981) being the repayment of the principal and its interest as specified in the Appendix 7 Payment Schedule hereof. The letter of credit shall contain the terms conditions wordings which are acceptable by the Contractor and shall be valid till the sixth (6th) month after the final installment of the repayment and shall permit payments in the following manner and as per the attached Appendix 7 Payment Schedule.

(a) Repayment of the principal of United States Dollars One Hundred and Four Million Ninety-one Thousand Six Hundred and Twenty-five Only (USD104,091,625) of the total Contract Price shall be made by the Employer to the Contractor in fourteen (14) bi-annual installments commencing from the twenty-fifth (25th) month after the contract becomes effective as stipulated in Appendix 7 Payment Schedule hereof.

(b) Interest on the aforesaid principal at six and half percent (6.5%) per annum covering the specified period totaling United States Dollars Twenty-one Million Nine Hundred Eighty-nine Three Hundred and Fifty-six only (USD21,989,356) shall be made by the Employer to the Contractor bi-annually together with the repayment of the principal as stated in the terms of 3.1.2 (a) .and in Appendix 7 Payment Schedule hereof.

3.2 If the Employer makes late payment for any part of installment and payment, the Contractor has the right to receive and the Employer shall be obliged to pay additional interest at six and half percent (6.5%) per annum as penalty.

3.3 When making the payment, the bank fees for the letter of credit issuing bank or paying bank will be borne by the Employer and the bank fees for the letter of credit negotiating bank will be borne by the Contractor.